MANUAL OF

LATHE OPERATION

and

MACHINISTS TABLES

This text scanned, cleaned, and prepared by Steve Conklin.

This Version is exactly as the version I scanned, with the Supplement to adapt the manual to Sears Craftsman lathes at the end of the document.

There is another version in which I have substituted the diagrams in the supplement into the manual, making it correct as-is for Sears Craftsman lathes.

January, 2014

MANUAL OF

LATHE OPERATION

AND

MACHINISTS TABLES

ENGINEERING DEPARTMENT

Atlas Press Company

1822 North Pitcher Street

Kalamazoo, Michigan, U. S. A.

Copyright 1937
ATLAS PRESS COMPANY
Printed in U. S. A.

CONTENTS

1 .....LATHE CARE AND CONSTRUCTION

2 .....THEORY OF METAL CUTTING

3 .....CUTTING TOOLS

4 .....THE MACHINING OF VARIOUS MATERIALS

5 .....HOLDING THE WORK

6 .....DRILLING AND BORING

7 .....THREAD CUTTING

8 .....LATHE ATTACHMENTS AND THEIR USES

9 .....WOODTURNING ON THE METAL LATHE

10 .....MACHINISTS TABLES

11 ..... INDEX

12 .....PAGES FOR YOUR SHOP NOTES

PREFACE

This Manual of Lathe Operation has been prepared to provide authentic, up to date, and complete operating information for owners of Atlas Lathes and other types of metal cutting lathes.

Fundamental and concrete theory, as well as operating procedure, is included in order to make this book suitable for students, apprentices and vocational schools. Much of the data will prove invaluable to the machinist and the more experienced lathe operator.

It is our hope that this Manual will further the advancement of the lathe user in all walks of industry. If we have helped him, even in a small way, the research and labor involved in the preparation of this book will have been well worth while.

Atlas Press Company

We wish to extend our sincere appreciation to the many manufacturers, engineers and machinists who have assisted in the preparation of the technical material in this manual. If the reader desires further information on any of the metals or plastics mentioned, the Atlas Press Company will gladly furnish the name and address of the manufacturer.

FOREWORD

The history of modern machinery started in the last years of the eighteenth century when Henry Maudslay, an Englishman, built the first practical screw-cutting lathe. When compared with a modern precision lathe, this machine was slow and clumsy, but from the basic principles of Maudslay's lathe have come nearly all modern machine tools. The skill of early New England machinists in developing his theories soon put the United States in the front rank among industrial nations of the world.

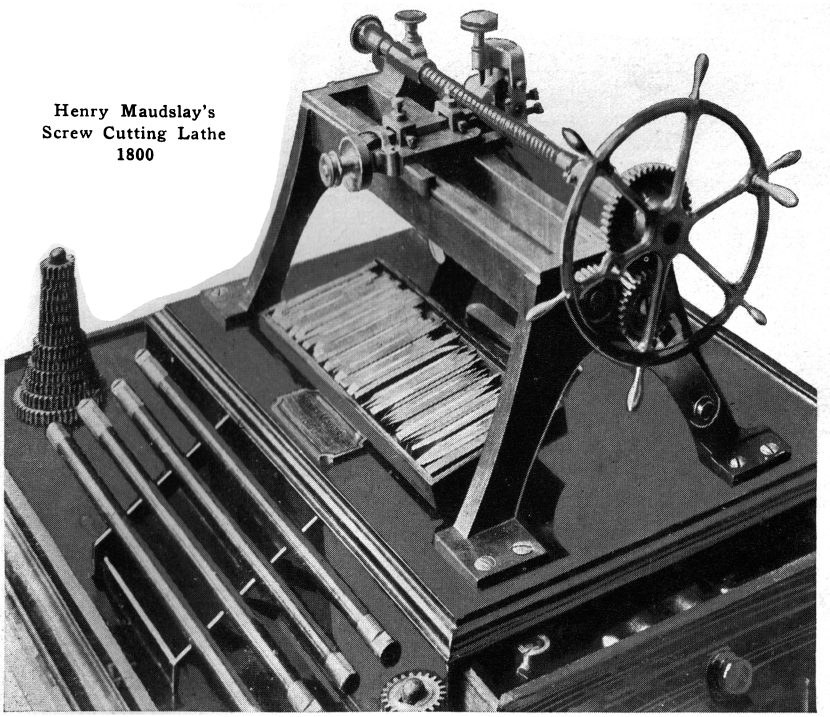

Henry Maudslay's
Screw Cutting Lathe
1800

Today, nearly 150 years after Maudslay, the screw-cutting lathe is still the heart of industrial manufacturing. It seems odd to consider the lathe so vitally important when large batteries of automatic machines are used in every modern factory. But pay a visit to the factory tool room where the machining is done which makes possible the construction of these huge automatic machines. There you will find a lathe, easily the most important tool, busy at

the hands of an expert machinist turning the plans of designers and engineers into new tools and machines for modern industry.

The lathe is the "King of All Tools"—more jobs of a mechanical nature can be done on a lathe than with any other dozen tools. In the machine shop, experimental shop, or home workshop, the metal lathe is called upon for many operations. Turning, milling, grinding, drilling and boring must be performed on iron and steel; wood, plastics, alloys and soft metals must be shaped into form; springs and coils wound; threads of all sizes and shapes have to be cut; and machine parts need repairing or replacing. Manufacturers, tool and die makers, experimenters, automotive men, model builders, inventors—thousands of businesses, hobbies, and professions depend on a precision screw cutting lathe with its many attachments.

THE ATLAS SCREW-CUTTING LATHE

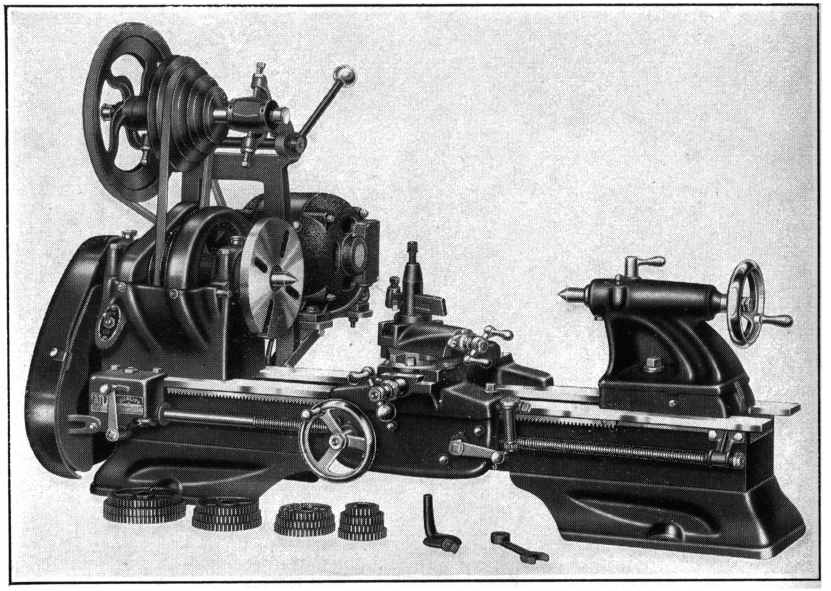

A Modern Atlas Screw-Cutting Lathe With Back Gears and Integral Countershaft.

For years a screw-cutting lathe required an investment of several hundred dollars—a huge demand existed for an accurate, popular-priced lathe. The Atlas was built to meet this demand—backed by a manufacturer with over a quarter-century of experience in the producing of precision tools and machinery for industry. In planning this lathe, designing engineers, who for years had been intimately connected with the modern methods of auto-

motive manufacturing, cooperated with practical machinists of long experience in lathe operation. A sizeable fortune was spent on tools and dies for its manufacture. Machine tool builders were called upon to furnish special machinery so that modern precision methods of manufacturing could be employed. As a result of these combined efforts, the Atlas Screw Cutting Lathe was introduced.

From the very first, hundreds of shops in all parts of the world found that an investment in such a lathe quickly paid for itself. Factories and tool rooms soon learned that an Atlas performed a large percentage of their work faster, cheaper and more accurately; inventors discovered that it was just the tool for the development of their ideas.

The Atlas Press Company takes pride in its contribution to the machinist.

ATLAS-EQUIPPED SHOPS

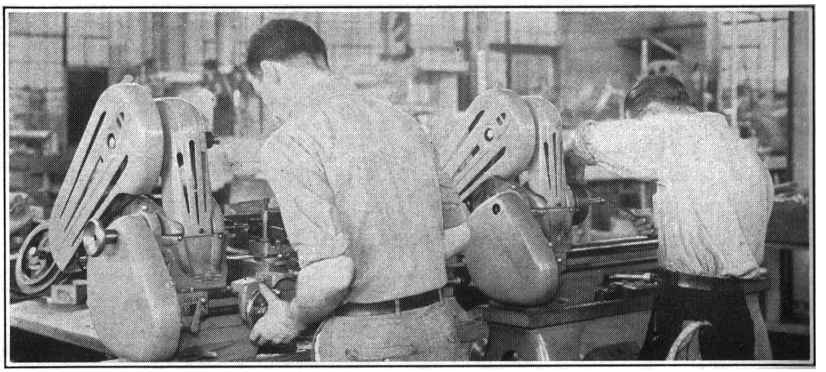

Factory

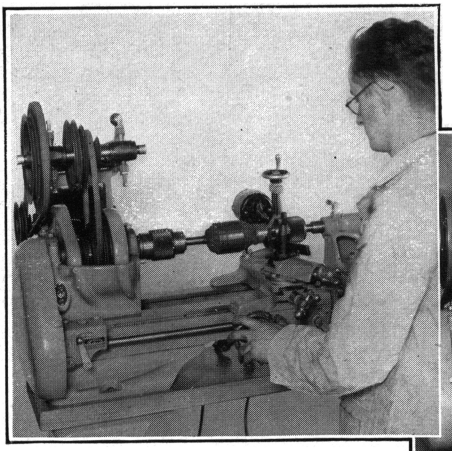

Service Station

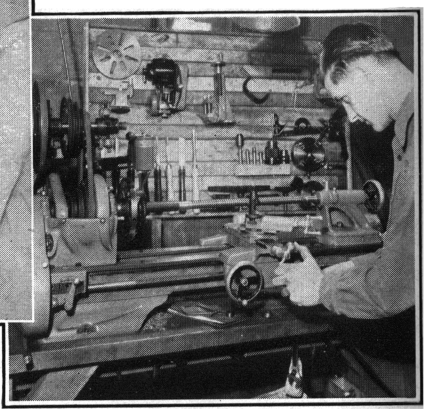

Home Workshop

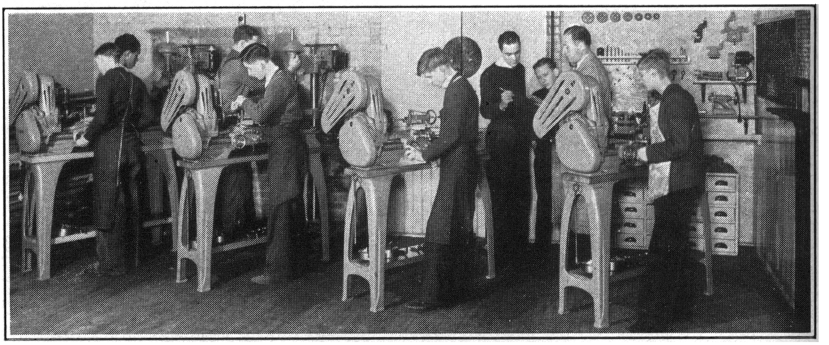

School

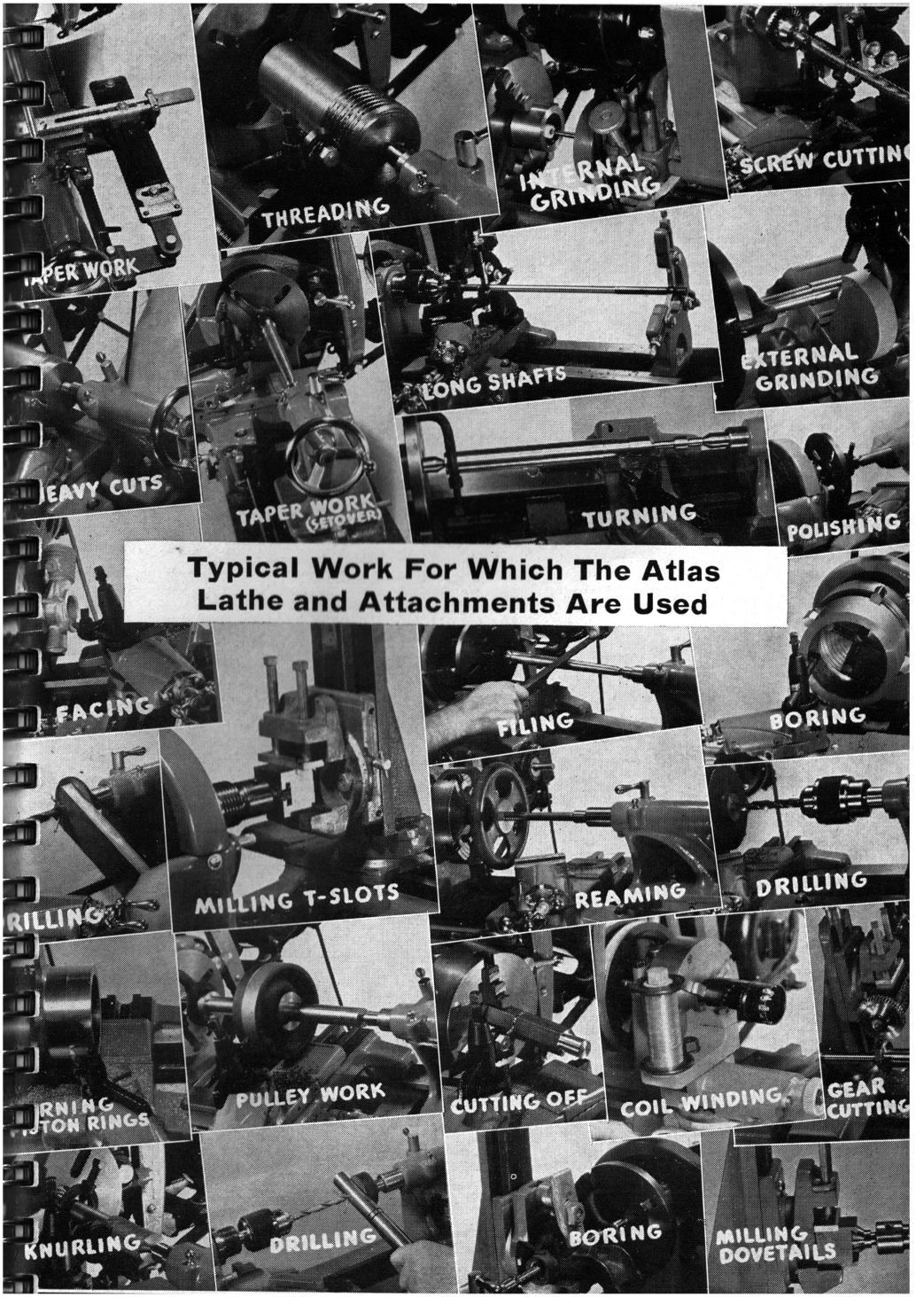

Typical Work For Which The Atlas Lathe and Attachments Are Used

Part 1

LATHE CARE AND CONSTRUCTION

PART 1

LATHE CARE AND CONSTRUCTION

SETTING UP THE ATLAS LATHE

Every Atlas Lathe is shipped completely assembled. All unpainted surfaces have been greased thoroughly and wrapped in oil paper, and the entire lathe strongly crated. Take care in removing the crate—a crow bar or hammer can slip easily and damage some part of the lathe. If the inside cross braces of the crate are first removed and the side boards loosened at the bottom, the entire top of the crate can be lifted off.

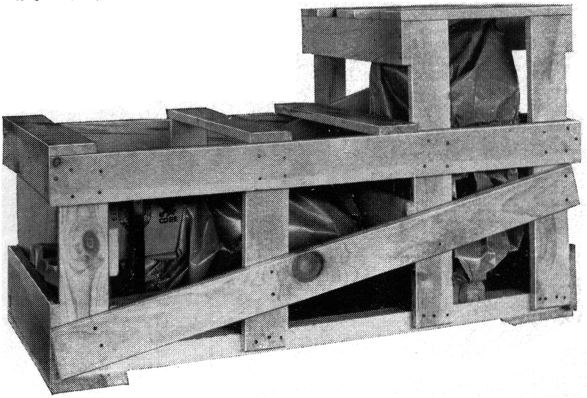

FIG. 1

An Atlas Lathe ready for domestic shipment. All machined surfaces are greased, and the completely assembled lathe is then wrapped in oil paper and solidly crated.

As soon as the lathe is unpacked, oil it completely and thoroughly at all points shown on the Oiling Chart on pages 6 and 7. Choose a well lighted location that is dry and with enough room for maximum efficiency and convenience.

Floor legs and table boards (page 2) make an ideal stand for the lathe. If the lathe is to be mounted on a bench, use one that is solidly built, well braced and with a good dry lumber top at least two inches thick. The precision of any lathe, regardless of size, depends a great deal upon the rigidity of the base under the lathe bed—a flimsy, warping bench top can, in a few days, spoil a careful mounting of the lathe and in time will impair its accuracy.

A bench height of 32 to 34 inches is correct for the man of average height. Adjacent edges of the top boards should be carefully joined and planed smooth. It is suggested that the top boards either be heavily dowelled, or that four or five 3/8" steel rods, threaded at both ends, be run edgewise through all of the top boards and pulled up tight. This latter method is preferred and calls for an accurate boring job. The top should also be planed smooth and level.

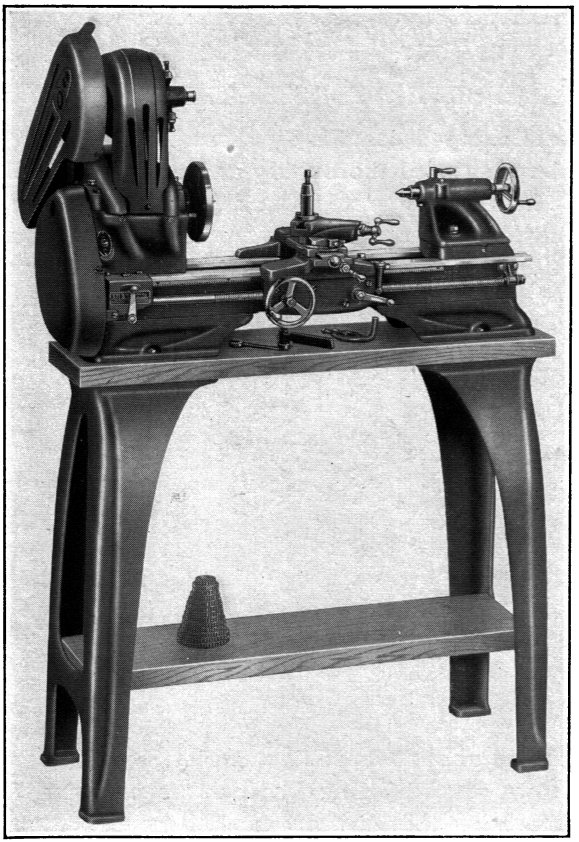

FIG. 2

The Atlas lathe mounted on floor legs and table boards. This type of mounting provides a permanently rigid and level support, avoids the imperfections of many shop benches and saves valuable floor space. The legs alone weigh over 95 pounds. The safety belt guards can be raised easily for changing belt positions.

LEVELING THE LATHE

The first step in successful lathe operation is to keep the lathe perfectly level at all times. When carelessly mounted any lathe bed will become twisted or bent, and with a slight amount of twist the centers become out of alignment and accurate work is impossible. Expert machinists agree that the better the leveling, the more accurate the lathe.

Here is the proper way to mount and level the lathe: With the lathe in position on the bench, mark and drill six 3/8" holes for machine bolts under the corresponding holes in the legs. Differences in height must then be detected with a good machinists level. Be sure the lathe bed is level ALL WAYS, including crosswise and longitudinally near both the headstock and tailstock ends (see Fig. 3). Differences in height are then taken up by the use of wide

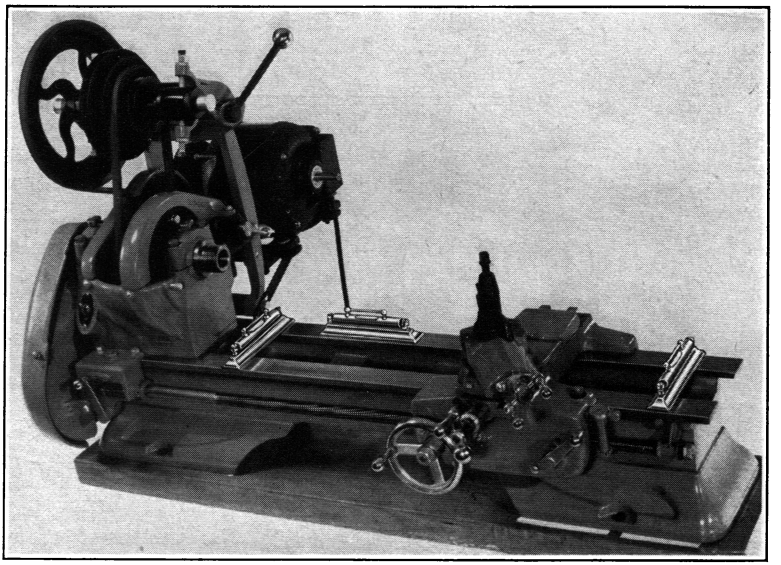

FIG. 3. Three Different Level Positions (only one level is required).

shims to insure a firm base. Shims should be thin metal or cardboard strips, preferably metal.

Repeat the checking operation after the legs have been bolted down tightly. It may be necessary to relax the bolts and adjust height by adding more shims. Most machinists check these leg shims regularly and whenever the lathe is expected to be in use for a long period of time. Before heavy work or whenever the lathe is moved to a new shop location, it is advisable to repeat the checking of the level position.

Do not slight the leveling of your lathe. In order to make precision cuts on long work it is absolutely necessary to have the bed perfectly aligned and horizontal. The precision built into the Atlas Lathe can be made entirely useless by faulty, uneven mounting. Extra care and time spent in installation and leveling will give the Atlas every chance to perform the accurate work for which it is built.

MOUNTING THE MOTOR

Atlas Lathes are designed to be run from a 1740 R.P.M. motor, either ¼, ⅓ or ½ H.P., depending upon the type of work being handled. With the lathe in place, mount the motor on the motor bracket and connect the switch wires as shown in Fig. 4. Before bolting down the motor, run it for a moment to make sure that the

direction of rotation is clockwise when facing the pulley end of the shaft. If the motor pulley does not fit readily on the motor shaft, scrape the pulley hole or dress the inside with emery cloth wrapped around a wooden dowel. Sight along the edge of the large pulley on the countershaft to obtain alignment with the motor pulley. Slotted braces are provided under the motor bracket for adjustment of belt tension. V belt drives require only medium tension, and the motor drive belt should be adjusted with the tension lever in the middle position.

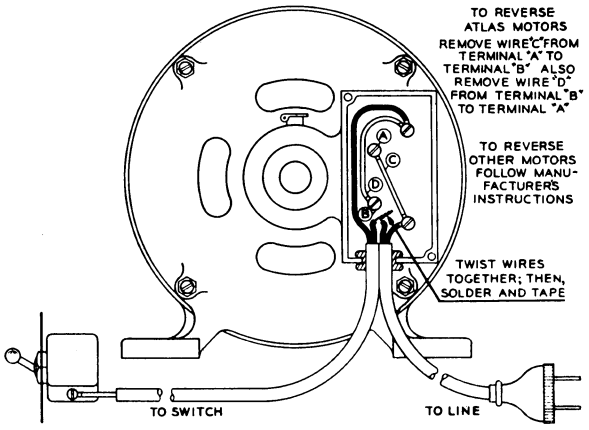

FIG. 4
Connecting the switch wires to the motor.

KEEP YOUR LATHE WELL OILED

Before using the lathe, oil it thoroughly at the points shown in the chart on pages 6 and 7. It is well to memorize the exact order of the chart. Use a good grade of machine oil—automotive oil, S.A.E. No. 10, is excellent for general lathe use. Automotive cup grease is suitable for the countershaft grease cups.

Both top and side surfaces of the bed ways should be oiled whenever using the lathe. These ways, as well as all other unpainted surfaces, should be covered with a generous film of oil when the lathe is not in use. Keep the lathe completely covered when it is in a dusty location or standing idle for a long time. Some types of gritty dust or soot are nearly as hard as emery dust and will cause wear unless lathe bearing surfaces are protected. Be sure to cover the bed ways during grinding operations.

Form the habit of oiling your lathe regularly.

BREAKING IN THE NEW LATHE

The Atlas Lathe has high-speed, close-fitting babbitt bearings similar to those used in large industrial machine tools and automobile motors. Before the lathe is used, these bearings must be "run-in" carefully to insure long and accurate service.

To run-in bearings properly fill the two headstock bearing cups

with a good grade of machine oil no heavier than S.A.E. No. 10 and adjust the belts to obtain a speed of 164 R.P.M. (see page 47). Operate the lathe at this speed for about an hour, keeping the bearings well flushed with oil. An especially good lubricant for running-in bearings is a mixture of one part Pyroil and four parts S.A.E. No. 10. "Pyroil" is the trade name of a special automotive oil made for breaking in new bearings (also supplied under other trade names).

Use plenty of clean oil during the running-in period. If the bearings heat abnormally, reduce the spindle speed for a short time. Always keep the wicking in the oil caps loose so that oil can be readily absorbed as needed.

CAUTION: Do not use speeds over 500 *R.P.M. until the lathe has been run at least* 10 *hours.*

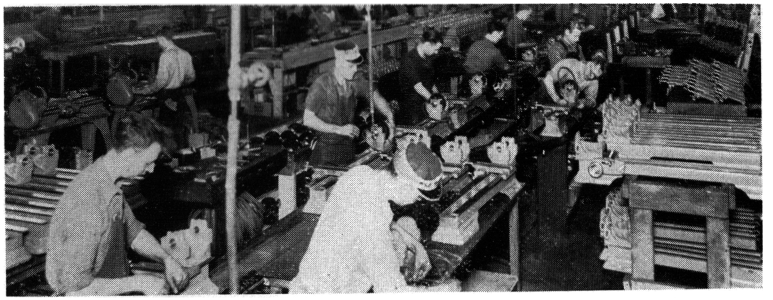

Atlas Production Lines

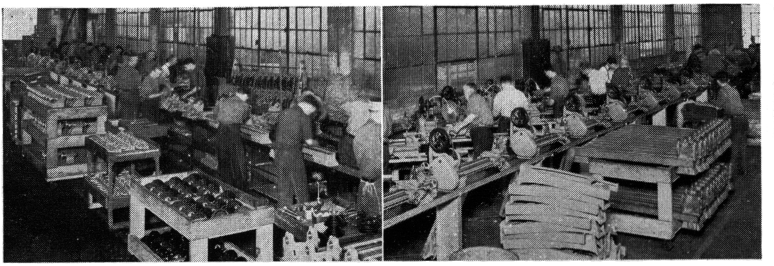

CONSTRUCTION OF THE ATLAS LATHE HEADSTOCK

The precision of a lathe depends to a great extent upon the care taken in the manufacture of the headstock. The Atlas Lathe Headstock is made of heavy, close-grained grey iron, ribbed and reinforced for absolute rigidity and solidly anchored to the bed. The front of the headstock casting extends up to the bearing height, providing a heavy, permanent truss between the right and

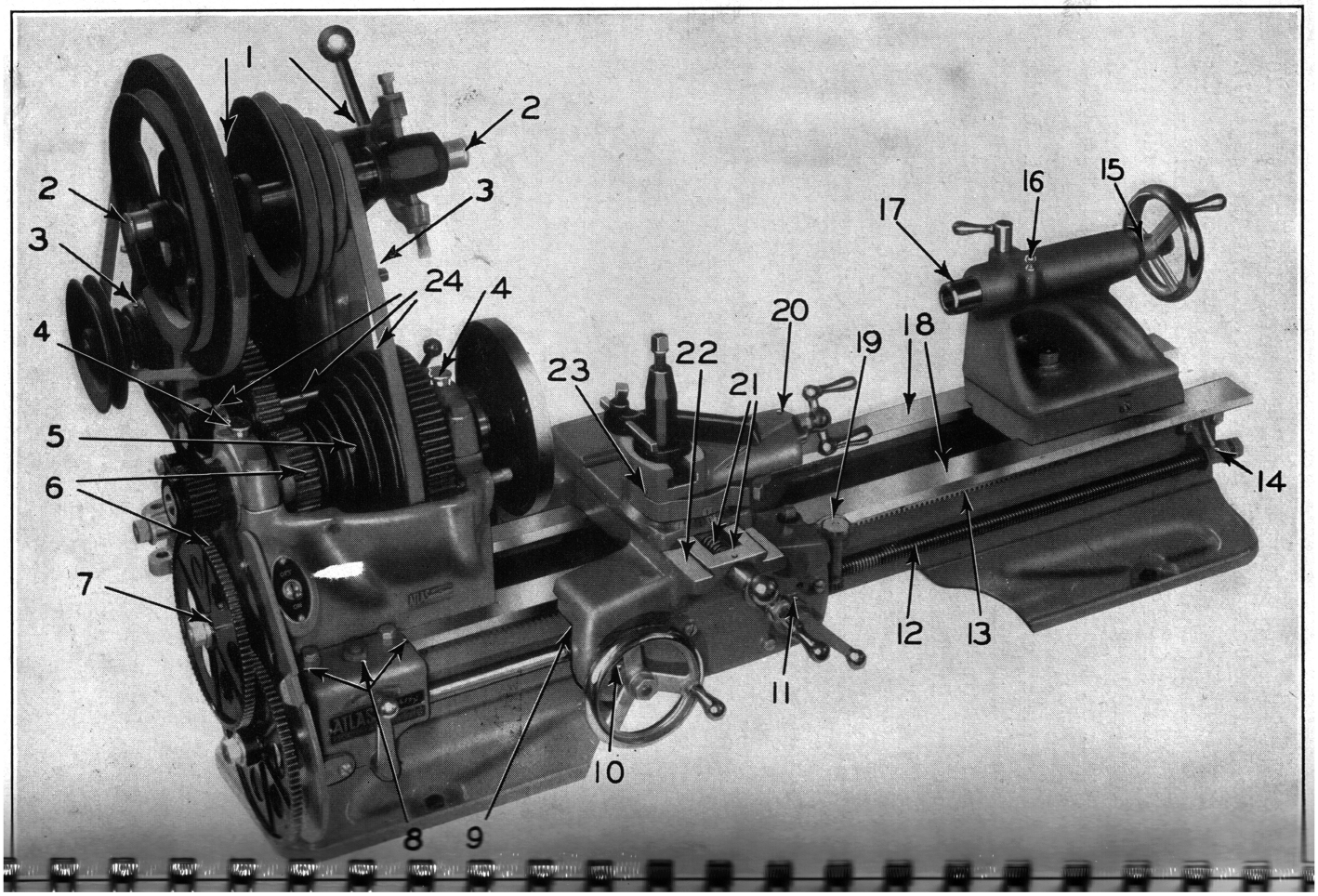
1
2
2
3
3
24
4
4
5
6
7
8
9
10
11
12
13
14
15
16
17
18
19
20
21
22
23

OILING CHART FOR THE ATLAS LATHE

1 Place a few drops of oil on the rockershaft bearings and cams every time the lathe is in use.

2 Countershaft Roller Bearings—Fill both grease cups with automotive cup grease every two weeks. Give the grease cup caps a turn or so every time the lathe is used.

3 Motor Bearings—Sleeve type motors have two oil cups which should be filled once a week with S.A.E. No. 10 Motor Oil or equivalent. Ball bearing motors have a sealed-in type bearing—every six months the small headless screw in these bearings should be removed and a moderate quantity of automotive cup grease forced around the bearing.

4 Left and Right Headstock Bearings—Oil with No. 10 motor oil or equivalent every time the lathe is used.

5 Spindle Pulley—Every time the lathe is used in backgear, remove the small screw in the bottom of the second step of the idler pulley and oil freely with No. 10 motor oil or equivalent. Replace screw.

6 Back Gears and Change Gears—A small amount of grease, preferably graphite grease, applied to the gear teeth will aid in obtaining smoother, more quiet operation.

7 Change Gear Bearings—Put a few drops of No. 10 motor oil or equivalent on the change gear bearings each time the lathe is used.

8 Lead Screw Stub Bearing and Reversing Gears—Put a few drops of No. 10 motor oil or equivalent in the three oil holes on the top of the reversing gear box every time the lathe is used.

9 Carriage Traverse Gear Case—Every time the lathe is in use, put a few drops of No. 10 motor oil in oil hole on top of gear case on back of carriage apron.

10 Carriage Hand Wheel Bearing—Put a few drops of No. 10 motor oil or equivalent in the ball spring oil hole every time the lathe is used.

11 Half-Nut Lever Bearing—Put a few drops of No. 10 motor oil or equivalent in the ball spring oil hole every time the lathe is used.

12 Lead Screw—About once a month clean the lead screw threads with kerosene and a small stiff brush and apply a small amount of No. 10 motor oil or equivalent.

13 Rack (on bed, under front way)—About once a month apply a small amount of cup grease to the rack after cleaning with kerosene and a small stiff brush.

14 Lead Screw Bearing (Right End of Lathe)—Put a few drops of No. 10 motor oil or equivalent in the oil hole on top of the bearing every time the lathe is used.

15 Place a few drops of oil between the handwheel and screw bearing whenever using lathe.

16 Tailstock Center Lubricant—Fill the small cup on the tailstock with a mixture of white lead and oil and apply to the tailstock center whenever turning between centers. If white lead is not available, use a liberal amount of cup grease on the center.

17 Tailstock Ram—Keep the outside surface of the tailstock ram well oiled.

18 Lathe Bed Ways—Keep the bed ways oiled at all times with No. 10 motor oil or equivalent and free from chips. Wipe off the ways before using and cover with fresh oil. Always leave a generous film of oil on the ways when the lathe is not in use. The lathe should be completely covered when not in use. During all grinding operations cover bed ways with canvas or cardboard.

19 Thread Dial—Once a week put a few drops of No. 10 motor oil or equivalent around the rim of the top of the thread dial.

20 Compound Slide Screw—Every time the lathe is used put a few drops of No. 10 motor oil or equivalent in the oil hole on top of the compound rest and above the compound screw bearing.

21 Cross Slide Screw—Put a few drops of No. 10 motor oil or equivalent in the oil hole above the front cross slide screw bearing after removing the small screw. Replace the screw. This should be done every time the lathe is used. Clean the cross slide screw regularly with a small stiff brush. Oil the screw threads by running compound rest back and forth.

22 Cross Slide Ways—Clean regularly and apply a liberal quantity of No. 10 motor oil or equivalent to the ways whenever the lathe is used.

23 Compound Slide Ways—Clean regularly and apply a liberal quantity of No. 10 motor oil or equivalent to the ways whenever the lathe is used.

24 Back Gear Spindle—Every time the back gears are used, remove the small screw in the center of the back gear spindle and oil freely with No. 10 motor oil or equivalent. Replace screw.

Keep all lathe bearing surfaces perfectly clean. Dirt is the natural enemy of accurate lathe work.

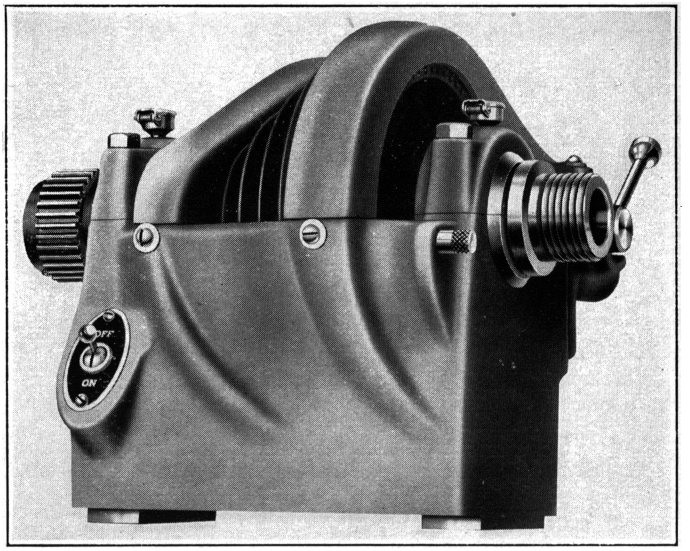

FIG. 5
The Headstock of the Atlas Lathe.

left bearings and insuring perfect alignment even under the heaviest loads. A switch to start and stop the motor is built into the headstock casting.

HEADSTOCK SPINDLE

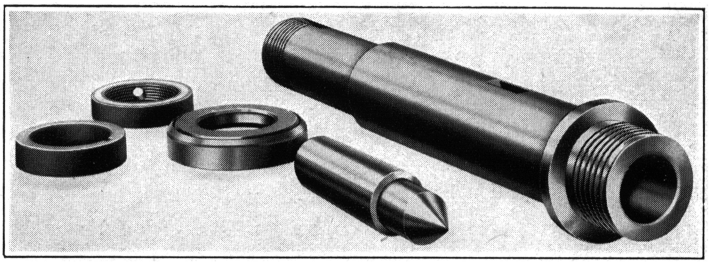

FIG. 6
Atlas Headstock Spindle, Take-up Nut and Collar, Ball Thrust Bearing, Center and Sleeve.

The Atlas Headstock Spindle is special alloy steel—accurately ground and polished to extremely close tolerances to provide a perfect surface for the bearing. The spindle diameter is 1½"—the nose has 8-pitch National Form threads. A 25/32-inch hole is bored through its entire length, allowing full-sized ¾-inch stock to be fed through the spindle (see Fig. 188). The spindle nose is reamed with a No. 3 Morse Taper, and a reducing sleeve is furnished to permit the use of a standard No. 2 Morse Taper center.

SPINDLE BEARINGS

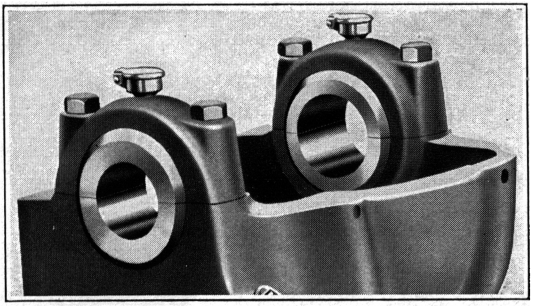

FIG. 7

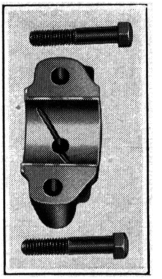

Bearing Cap

Exceptionally fine spindle bearings are used in the headstock of the Atlas Lathe. These bearings are made of special high-speed, copper-hard babbitt — precision line boring equipment insures a true bearing fit and perfect alignment of spindle and bed (see Fig. 8). This type of bearing is being used universally in automobile main bearings and maintains its original accuracy and alignment under heavy loads. Among lathe and machine tool builders this type of bearing has been a custom of the trade for many years. A removable bearing cap and shims with five .002-inch laminations

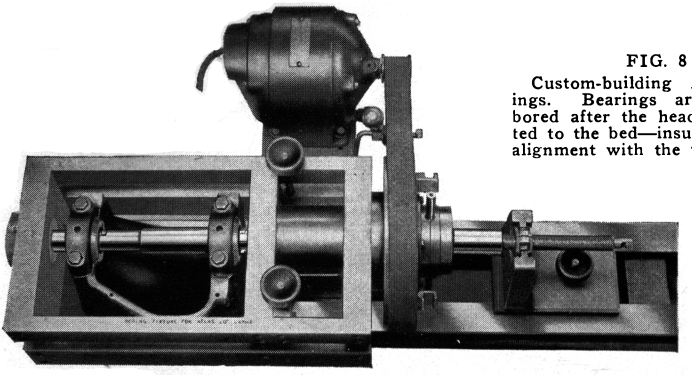

FIG. 8
Custom-building Atlas Bearings. Bearings are precision-bored after the headstock is fitted to the bed—insuring positive alignment with the ways.

are provided—adjustment for wear is made easily without special equipment or destroying the alignment of the spindle.

For metal turning, a rather tight bearing is essential. After the lathe has been broken in, the spindle should turn with a slight "drag," which can be felt when rotating the spindle by hand. No adjustment of the bearings should be necessary for hundreds of hours.

BEARING ADJUSTMENT

An up-and-down movement of the spindle indicates loose bearings caused by wear. Adjustment can be made easily, but first be sure that this bearing wear is not mistaken for end play.

To compensate for bearing wear, remove both bearing caps and all shims. Peel a lamination, or layer, from one of the shims in the right bearing and reassemble. If the spindle still turns loosely, remove a layer from the other right bearing shim. The proper fit will be indicated by a noticeable "drag" on the spindle after the bearing cap is tightened in place. Always remove shims from one side of the bearing, then the other, so as to keep the total shim thickness on both sides as nearly equal as possible. The bearing cap should be replaced and the fit tested after each layer of shim is removed.

To adjust the left bearing, loosen the right bearing just enough to allow the spindle to turn freely—make adjustment in the same manner as with the right bearing.

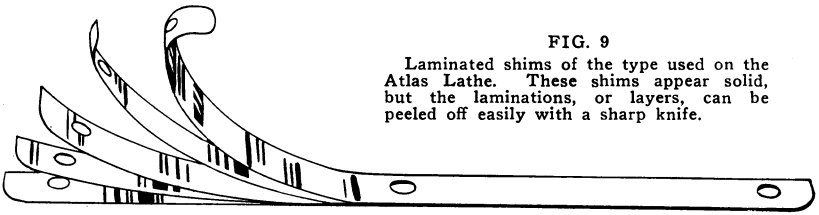

FIG. 9
Laminated shims of the type used on the Atlas Lathe. These shims appear solid, but the laminations, or layers, can be peeled off easily with a sharp knife.

IMPORTANT—When turning wood and plastics, polishing, or using speeds over 805 R.P.M., loosen the cap screws on each of the bearings between $\frac{1}{8}$ and $\frac{1}{4}$ turn. A tight bearing is essential for metal turning but not satisfactory for higher speeds. Loosening the cap screws provides the proper bearing clearance for higher speeds. *When changing back to lower speeds for heavier work, do not forget to tighten the cap screws.*

SPINDLE END PLAY ADJUSTMENT

All standard 10-inch Atlas Lathes are furnished with a ball bearing to absorb end thrust (see Fig. 10). Adjustment of this bearing simply requires loosening the set screw (A) in the threaded collar (B), and turning it to give a minimum of end play. By pulling this collar up tight, then backing it off a little, the spindle is given just enough play to turn freely. Whenever end play can be felt by pulling lengthwise on the spindle, this adjustment should be made in order to eliminate the chatter and inaccuracy which

would otherwise result. Oil the end thrust bearing every time the lathe is in use.

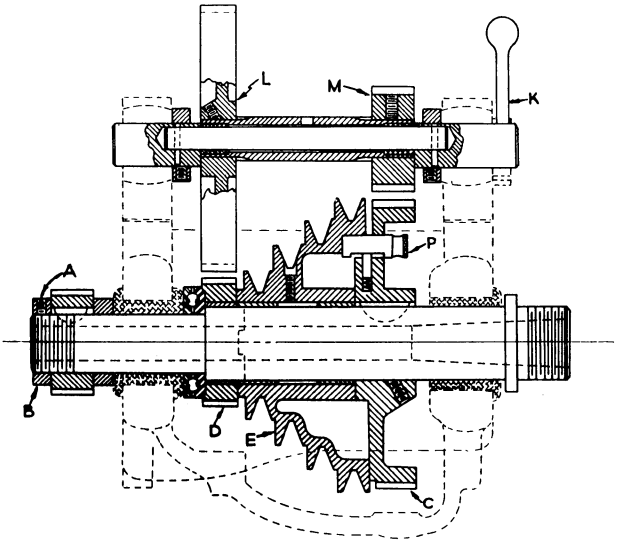

FIG. 10
Cross Section (top view) of the Atlas Lathe Headstock and Back Gearing Mechanism. Note end thrust bearing and adjusting nut, spindle idler pulley and bronze sleeve bearing. The operation of back gears is fully explained on pages 13 and 14.

Adjustment of end play on Atlas Lathes equipped with babbitt thrust bearings is made in the same way as on those with the ball thrust bearing. To remove Timken Bearing spindle for replacing belts, see page 16.

ATLAS LATHES WITH TIMKEN BEARINGS

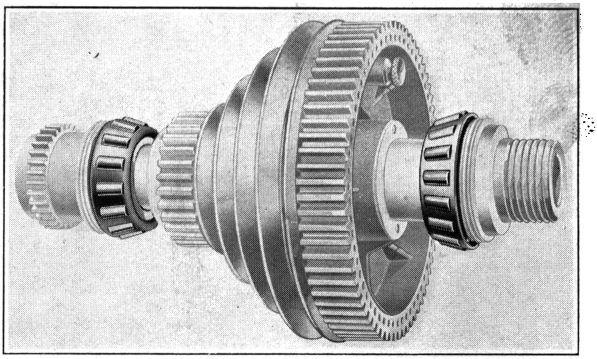

FIG. 11
The Atlas Headstock Spindle equipped with Timken Tapered Roller Bearings. The tapered design and positively aligned rolls mean that both radial and thrust loads are carried with minimum of friction.

Any 10-inch Atlas Lathe can be furnished at a small additional cost with Timken Tapered Roller Bearings for the headstock spindle. These bearings are recommended whenever the lathe spindle speed must be exceptionally high for long intervals. They are ideal for continuous production jobs, wood turning and metal

spinning as well as the usual work at normal speeds. A Timken-equipped Atlas also makes an excellent "combination lathe" for the shop handling quantities of both wood and metal work. Timken Bearings are pre-loaded to insure a tight bearing even under the most severe use—they must be installed on the lathe before shipment from the factory.

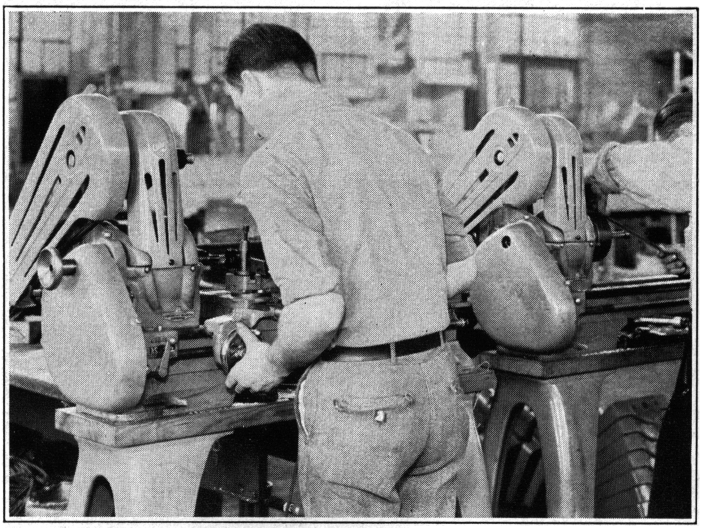

FIG. 12
Two Timken-equipped Atlas Lathes doing continuous high speed production work.

ADJUSTMENT OF TIMKEN BEARINGS ON THE ATLAS LATHE

Adjustment of the Timken Bearing is not often necessary, but if the spindle spins too freely or play is noticeable when the spindle is pushed back and forth, the following simple procedure will adjust the headstock bearings:

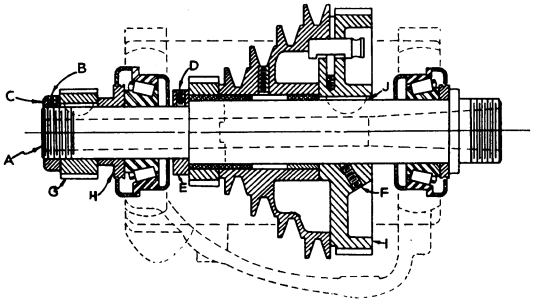

FIG. 12A

Run the lathe between thirty minutes and an hour to warm up the spindle (a temperature rise of 50° Fahr. increases the length of the spindle about .002 inch between bearings). Then loosen the set screw B (in

Fig. 12A) on the thrust nut, C, at the extreme left end of the spindle, A, and turn it up to a point where no play can be detected in the spindle. Advance this thrust nut 1/16 turn (equal to two teeth on the spindle gear) past that point in order to provide the correct pre-load. Tighten the set screw.

CARE OF TIMKEN BEARINGS

Atlas Lathes equipped with Timken Bearings can be set to work immediately. Oil the bearings every time the lathe is in use with S.A.E. No. 10 motor oil or a good grade of machine oil.

THE BACK GEARS OF THE ATLAS LATHE

The back gears in Atlas Lathes are designed to reduce the spindle speed and provide the power needed for heavy cuts and large diameter work. The back gear ratio is approximately 6 to 1. The back gears are conveniently located, easily used and take up very little space. Two iron guards provide a safety covering. The mechanism for changing from direct drive to back geared drive is quick and simple in operation. Adequate bearings and good gears are both vitally important in lathe construction.

The back gearing mechanism of the Atlas Lathe is pictured in Figure 13. Figure 10 explains the details of operation. The "bull gear," C, is keyed solidly to the spindle. The small gear, D, and the spindle pulley, E, are fastened together rigidly—they have wide, perfectly fitting bronze bearings for rotation on the spindle. This small gear and pulley assembly is free to rotate unless the pin, P, is pushed in, locking the pulley to the bull gear and spindle. In this locked position with the back gears disengaged, the spindle is driven directly from the countershaft.

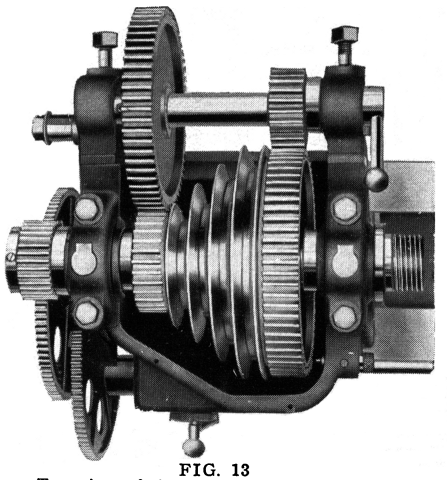

FIG. 13
Top view of the headstock of the Atlas Lathe showing the back gears.

When the pin, P, is pulled out of the bull gear and the back gears are engaged by pulling forward the eccentric shaft lever, K, the belt from the countershaft drives the small gear and pulley assembly, D and E, the small gear meshes with and drives the large back

gear, L, and the small back gear, M, meshes with the bull gear, C, turning the spindle.

The back gear spindle should be oiled as shown in the Oiling Chart on pages 6 and 7. A small amount of cup grease or graphite grease on the teeth of the gears will sometimes give more quiet operation. Back gear drive is usually more noisy than direct drive, and the use of the back gears with the motor pulley belt in the high speed position is not recommended or necessary for general use. These high speeds are shown in Figure 55, page 47.

INDEXING MECHANISM

The face of the front spindle gear on the Atlas back-geared lathe has 60 evenly spaced indexing holes for such dividing operations as fluting, reeding, serrating, sprocket- and spoke-spacing. On Unit Plan lathes these holes are located on the face of the spindle pulley.

To divide the circumference of a piece of work into a given number of equal divisions, mount the work and engage one of the indexing holes by pressing lock pin through headstock. Perform operation, release pin and, after consulting indexing table below, rotate gear the proper number of indexing holes. Engage hole and repeat operations until circle has been completed. NOTE: When using lathe dog be sure that tail of dog fits tightly in slot of face plate. In layout work it is advisable to use a pencil to mark all required divisions *before* beginning the actual operation.

INDEXING TABLE

Divisions Desired	No. of Spaces	Degrees of Arc	Divisions Desired	No. of Spaces	Degrees of Arc
1	60	360	10	6	36
2	30	180	12	5	30
3	20	120	15	4	24
4	15	90	20	3	18
5	12	72	30	2	12
6	10	60	60	1	6

THE SELF-CONTAINED COUNTERSHAFT OF THE ATLAS LATHE

The countershaft of the Atlas is attached to the headstock of the lathe, putting it within easy reach of the operator and making the changing of speeds a simple matter. Sixteen speeds are available, ranging from 28 to 2,072 R.P.M.

The modern design of the Atlas Countershaft does away with the irritating disadvantages of a cumbersome, space-taking flat belt drive with its limited speed range and difficulties of adjustment. It provides a smooth, even flow of power to the spindle at the exact speed most efficient for the work being done.

The Atlas countershaft spindle revolves on Hyatt Roller Bearings, amply lubricated through the hollow spindle. These fine bearings transmit maximum power to the spindle and give years of trouble-free performance.

DETAILS OF THE ATLAS COUNTERSHAFT

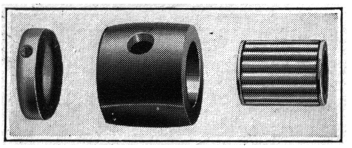

FIG. 14
Hyatt Roller Bearings Used in the Countershaft of the Atlas Lathe

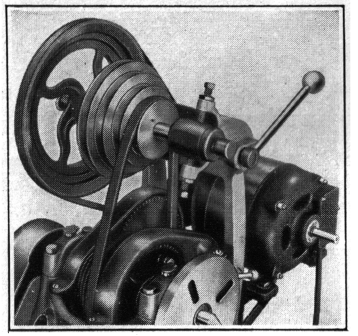

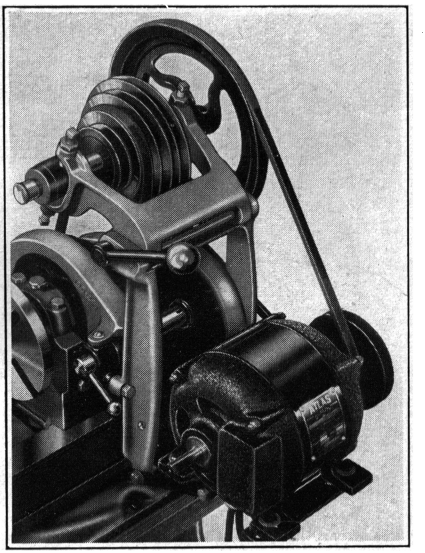

FIGS. 15 AND 15A
The countershaft of the Atlas Lathe, an integral part of the lathe itself. Full belt adjustment is provided, and a convenient release lever permits quick belt changes. The motor bracket is a part of the countershaft assembly.

ADJUSTING BELTS

The driving belt is adjusted easily and accurately by means of the four countershaft adjusting screws. Make the countershaft belt adjustments with the belt tension lever in the middle position so that the center of the belt can be pushed in about one inch with a moderate amount of pressure. V-belts do not have to be tight in order to drive normal loads, and belt life will be lengthened by running them fairly loose. The tightest position of the belt tension lever is for very heavy loads only, not for ordinary turning.

In tightening the four countershaft adjusting screws, it is not necessary to draw them up too tightly—the compressing of the outer sleeve will distort the bearing and might cause permanent damage. Turn these screws up until they are finger tight, then about $\frac{1}{8}$ turn more, and lock.

The motor drive belt is adjusted by moving the motor bracket

up or down. This adjustment should also be made with the belt tension lever in the middle position—a moderate amount of pressure should depress the center of the belt about 1½ inches.

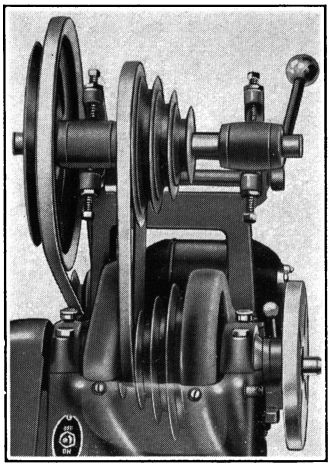

THE V-BELT DRIVE

V-belt drives, due to their many advantages, are used in practically all modern machinery installations. This type of power transmission is ideal for metal lathes because it assures smoother operation, less slippage and maximum power.

The V-belts used on the Atlas Lathe have been scientifically designed to give long, efficient service, and if properly used and cared for will serve for hundreds of hours of operation.

VEE-BELT OPERATION

Do not run V-belts too tight. Relax belts when lathe is idle. Clean oily belts—oil shortens belt life.

Keep pulley sheaves smooth. If accidentally nicked or marred, dress them down with a file and polish with emery cloth.

Do not try to shift belt positions while the lathe is running, or without loosening the belts with the belt tension lever.

Replacing belts: The motor drive belt is easily replaced. When replacing spindle drive belt, remove spindle, and after installing new belt, see that the bearing caps and shims are placed exactly as they were originally. Safety belt guards are recommended for industrial and educational use. See page 2.

To remove Timken Bearing Spindle for replacing belts: See Fig. 12A. Remove gear guards. Loosen set screw B, 2 set screws D, and set screw F. Remove thrust collar C, feed gear G, and flanged collar H. Place 2 pieces of wood between head and large spindle gear I. Hold piece of wood on left end of spindle and tap firmly with hammer. Continue tapping spindle from left to right until key J comes out of gear I. Remove key with pliers. Remove burr from spindle beneath F. Continue to drive spindle until there is sufficient room for belt. To reassemble, reverse process.

THE ATLAS LATHE BED

The accuracy of the lathe bed is most important from the standpoint of precision and good lathe work. Realizing this, the Atlas

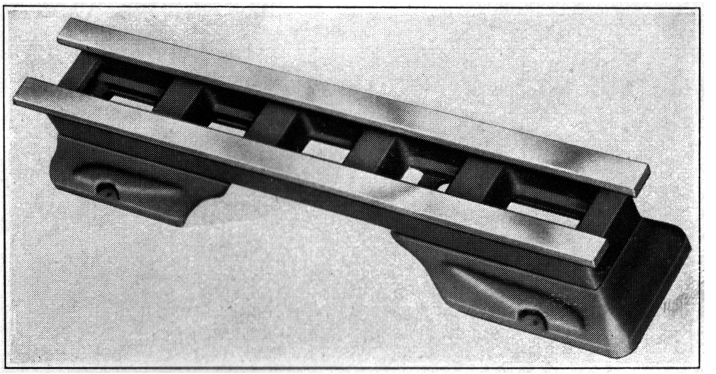

FIG. 16
The finished Atlas Lathe Bed—seasoned, milled, ground and ready for the assembly line.

Press Company, by the use of specially designed milling and grinding machinery and extreme care in manufacture and inspection, has succeeded in producing a lathe bed with a degree of precision previously unknown in popular-priced lathes.

The accuracy of the bed, regardless of design, is almost entirely dependent upon the finish it receives in the process of manufacture. The milling or planing operations used to reduce lathe beds to approximately final shape, do not give accuracy of more than two or three thousandths of an inch. The bed surfaces must then be either hand scraped or machine ground.

Modern industry has proved conclusively that surfaces can be precision-finished by grinding to unbelievably close limits—a production accuracy undreamed of ten years ago. Old fashioned, expensive methods of hand scraping have nearly disappeared—better and more adequate equipment is now being produced by machine grinding at a more moderate cost than ever before.

A precision grinding machine made especially to produce the accurate finish on the Atlas Lathe Bed (Fig. 18) requires a huge expenditure of money, but a precision lathe demands a precision bed—there can be no compromise.

The Atlas Bed is made from the best quality, close-grained semi-steel casting. The entire bed, comprising the cross ribs, ways and base, is made in one piece. The heavy box-type cross ribs, spaced every four inches, rigidly brace the bed ways against heavy turning forces. The heavy ways on top and the inner bead at the

TWO STEPS IN THE MACHINING OF A LATHE BED

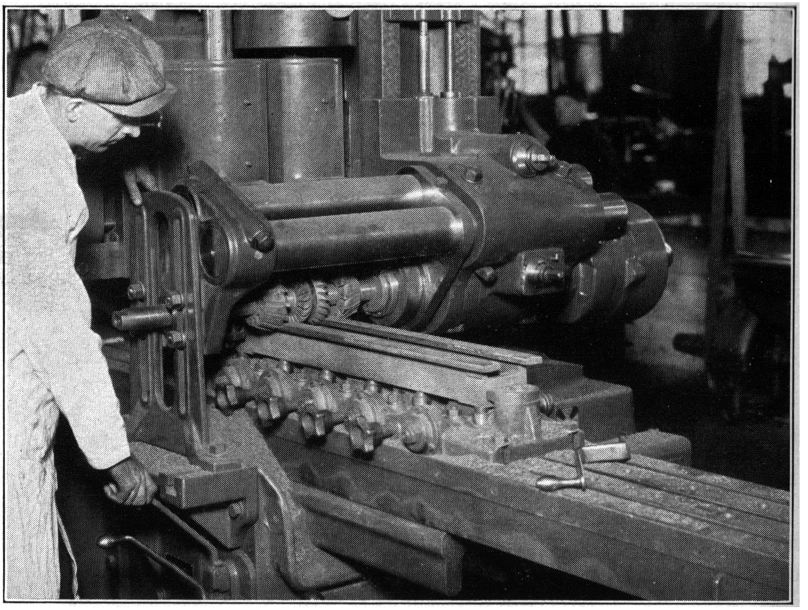

FIG. 17
A huge Kearney-Trecker Milling Machine designed and built especially for milling Atlas Lathe Beds.

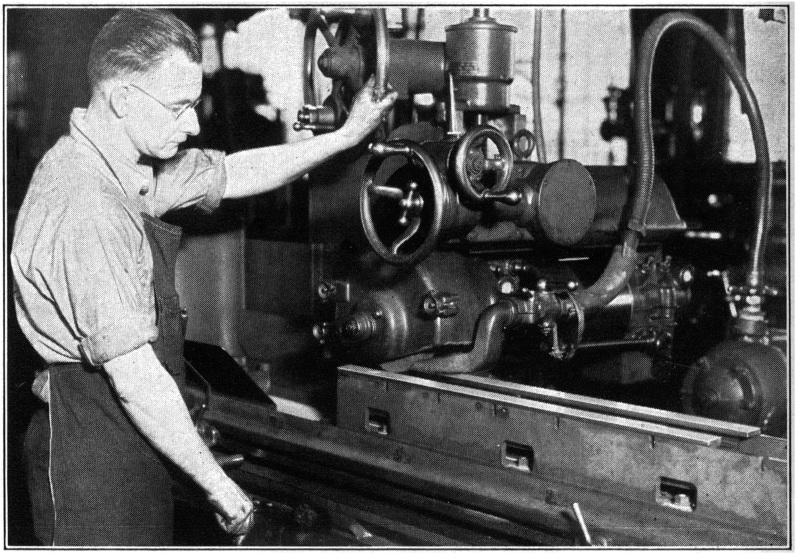

FIG. 18
A special Norton Surface Grinder that trues and polishes the lathe ways more accurately than can be done by hand.

bottom resist longitudinal stresses. The heavy streamlined legs with cross-braces have a total bearing surface of 48 inches on the bed. This unusually large bearing surface provides a sturdy base for the entire lathe and keeps vibration at a minimum.

After the bed is cast, it is first rough-milled and allowed to season, or age, for a number of months. This permits internal strains in the metal to become normalized, so that warping and twisting will not occur in the finished bed. After seasoning, a finish milling cut is taken, and the ways are then finish-ground on the especially designed surface grinder. The completed bed is checked on a special master surface plate, inspected innumerable times during the assembly of the lathe, and carefully checked again by the final inspectors.

FIG. 19
Before assembly every Atlas Lathe Bed is tested on this master surface plate.

BE CONSIDERATE OF THE LATHE BED

With normal use no appreciable bed wear will occur even over a period of years, but any finely finished metal surface can be damaged by abuse, and your lathe bed is no exception.

Tools or other objects should not be dropped on the ways.

Do not use the lathe bed as an anvil.

Do not drop chucks on the bed when removing them from the spindle.

Do not allow chips to accumulate on the bed. When filing or grinding on the lathe, remove the fine dust and oil the ways liberally as soon as the operation is finished. Better still, keep the lathe bed covered during such operations.

Keep the bed well oiled when not in use—when ready to use the lathe, wipe the ways and cover them with clean oil.

Keep the lathe bed level.

THE CARRIAGE AND COMPOUND REST OF THE ATLAS LATHE

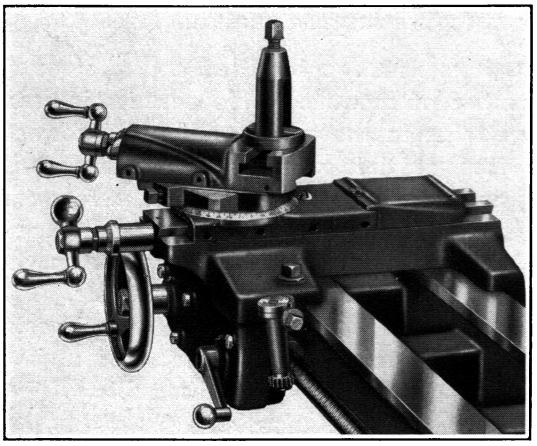

FIG. 20
Carriage and Compound Rest Assembly

While the accuracy of cuts parallel to the bed depends upon the accuracy of the lathe bed, the accuracy of cross and compound feeds depends upon the accuracy of the carriage and compound ways. Consequently, a great amount of care is taken in the machining of these ways for the Atlas Lathe.

The carriage is a heavy, well proportioned grey iron casting, with six wide bearing surfaces, each 8½ inches long, in contact with the bed. This large amount of bearing surface minimizes wear and results in more permanent accuracy. The front of the carriage, called the "apron," contains the half-nut mechanism and the longitudinal feed gears. These parts are described in a later paragraph (page 22).

The cross feeds are controlled by convenient hand wheels and ball cranks with ample adjustment for play (see page 22). Precisely cut feed screws and bronze nuts insure accuracy, and both cross feed and compound feed are graduated in thousandths of an inch. The compound feed can be turned in a complete circle, and it is graduated in degrees from 0 to 180, so that any angle can be cut with the compound rest.

ADJUSTMENTS OF THE CARRIAGE

Four gib screws are located on the back of the carriage for adjusting horizontal play between the carriage and the bed—these screws should be tightened just enough to give a firm sliding fit between carriage and bed. Bearing plates on the carriage, which bear on the under side of both the front and the back of the bed ways, anchor the carriage firmly to the bed in a vertical direction,

These bearing plates have laminated shims for adjustment of possible wear (see Fig. 9).

The large carriage hand wheel on the front of the apron operates a set of gears, the last of which meshes with the rack on the bed. These gears can be adjusted for play by loosening the screws on the front of the apron, moving the gear case toward the rack, and tightening the screws.

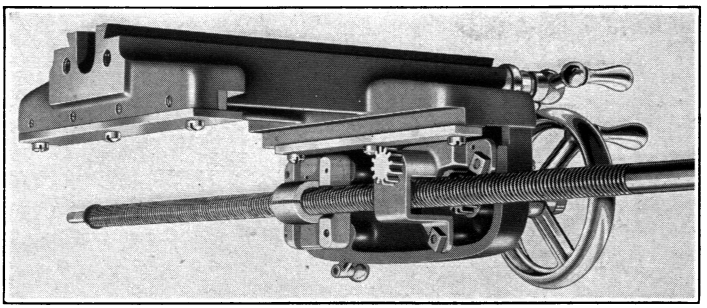

FIG. 21
View of the carriage of the Atlas Lathe, showing gib screws and bearing plates.

REMOVING THE CARRIAGE FOR CLEANING AND ADJUSTING

In order to clean or make adjustments on the inside of the apron, it is preferable to take the carriage completely off the bed. First remove the tailstock, then unbolt the bearing on the right end of the lead screw and remove the lead screw (half-nut lever must be up). One of the bevel gears in the reversing gear box will come out with the lead screw—watch its position so that it can be put back correctly. With the lead screw out, it is a simple matter to loosen the gibs on the back of the carriage, and slide the carriage off the bed.

When reassembling, turn the lead screw until the keyway slips into the reverse shift collar in the reversing gear box.

ADJUSTING CROSS FEED AND COMPOUND FEED GIBS

The gibs on the cross feed slide and the compound feed slide should be adjusted at regular intervals. The cross slide gibs should always fit snugly, because the cross slide is in almost continual use. The compound slide gibs should be kept tight unless using the compound feed.

For best results, do not take heavy cuts or use the cut-off tool with the compound rest overhanging the compound rest slide.

Be sure to loosen the two set screws whenever changing the position of the compound rest.

The ball and crank handles on the cross feed screw and the compound feed screw can be adjusted for play with the two nuts on the hubs of the handles. To adjust, tighten the inner nut and lock with the outer nut. An extremely tight fit is likely to result in a jerky feed—the turning force keeps these slides firm against the screw, and play in the handles does not affect the accuracy of the work. A nice working, snug fit is ideal.

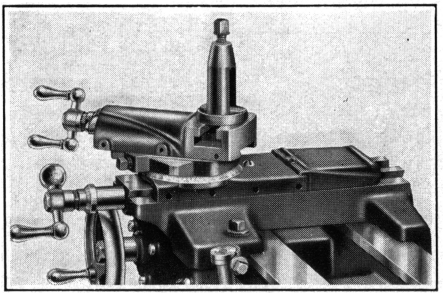

FIG. 22. Cross Slide and Compound Rest of the Atlas Lathe

POWER FEED MECHANISM AND LEAD SCREW

The longitudinal power feed on the Atlas Lathe consists of the gear train, reversing gear box, lead screw and half-nut mechanism. Detailed operation of the feed gears, together with the set-ups for cutting various threads, will be found in Part 7 of this Manual.

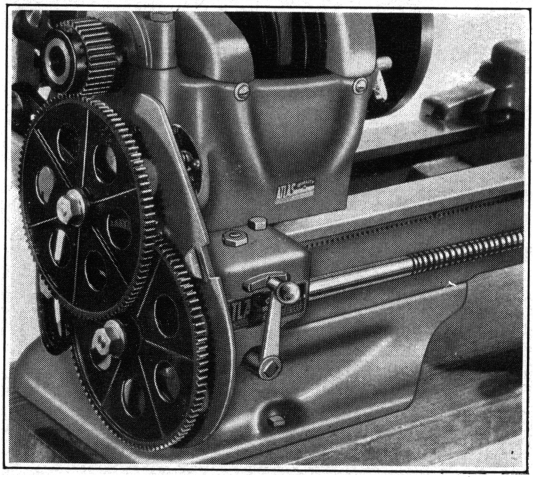

FIG. 23
Arrangement of the Feed Gears, Reversing Gear Box and Lead Screw of the Atlas Lathe.

Instead of the feed gears driving the lead screw directly, a reversing mechanism is built between the two—a unique feature of the Atlas Lathe. This mechanism makes it possible to reverse the direction of the lead screw rotation, and consequently the direction of the power feed, while the lathe is running. The shifting of gears to obtain this change of feed is done at the point of lowest speed. The usual method of reversing the power feed consists of two small gears between the spindle gear and the rest of the gear train, which is at the point of highest speed and necessitates stopping the lathe to avoid injury to the gears.

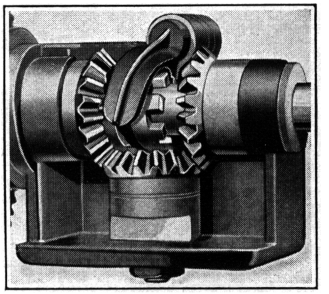

FIG. 24

An inside view of the reversing gear box on the Atlas Lathe. The feed reverse lever engages the shift collar with either of the two reverse gears and reverses the direction of the power feed almost instantly.

In boring, knurling, finishing cuts, and many other lathe operations, it is advantageous to reverse the power feed without stopping the lathe and without changing the setting of the tool. With the Atlas reversing mechanism the feed can be reversed quickly by simply shifting the lever.

Figure 24 makes clear the operation of the reversing mechanism. Notice that the center notch of the reverse lever is a neutral position—when the reverse lever is shifted, it takes only an instant for the shift collar to align and mesh with the slots in one of the bevel gears. Do not try to force the lever into either side position—push it firmly toward one side or the other and it will immediately mesh into place.

The lead screw is accurately cut with a pitch of 1/8 inch, (eight threads per inch). Its accuracy is maintained by keeping it clean and free from chips. Once a month or oftener clean the threads with a stiff bristle brush and kerosene, and oil freely along its entire length.

The lead screw bearing on the tail end of the lathe serves as a "safety valve" protecting the lead screw. One of the most common accidents on the lathe is letting the power feed drive the car-

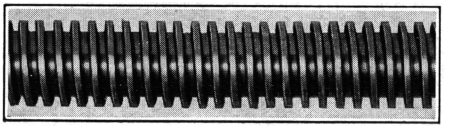

FIG. 25

A closeup of the lead screw of the Atlas Lathe. 8 Acme threads per inch. A high degree of accuracy makes possible precision thread cutting.

riage into the headstock or tailstock. Serious and expensive results from such an accident are prevented by the light construction of this bearing. The lead screw simply forces itself out and breaks the bearing casting. In this way the light bearing prevents what would otherwise be an expensive break-down.

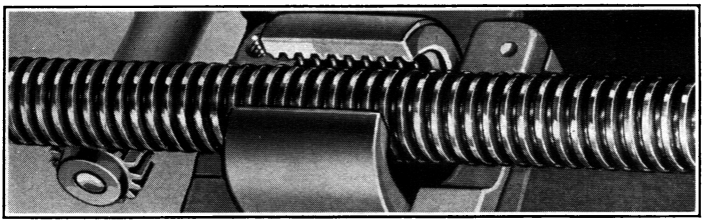

FIG. 26

A view of the half-nuts and their closing mechanism. Positive closing action, combined with the use of two half-nuts, insures smooth and accurate threads.

Figure 26 shows the construction of the half-nuts and their closing mechanism. Two half-nuts, closing on both sides of the lead screw, prevent strain on the lead screw and insure a smooth feed. In order to minimize wear on the lead screw, the half-nuts are made of a metal softer than steel. The carriage should be removed at regular intervals and the half-nuts, closing mechanism and rack cleaned thoroughly and greased. Dirt or chips will damage the half-nuts and the lead screw. Oil regularly.

THE TAILSTOCK OF THE ATLAS LATHE

The tailstock of a lathe must line up perfectly with the headstock at any point on the lathe bed. The precision of the ground ways and the extra care taken in the fitting of the Atlas tailstock assure accurate alignment at any position.

The ram is made of special steel, finish ground, and has an accurately reamed No. 2 Morse Taper hole for the tailstock center. Turning the tailstock hand wheel in a counter-clockwise direction to the end of its travel automatically ejects the center. On the Atlas Lathe the ram is graduated between 0 and 3 inches by 1/16ths for accurate boring and drilling. The side tailstock bearing on the rear bed way is gibbed for take-up adjustment. Two gib screws,

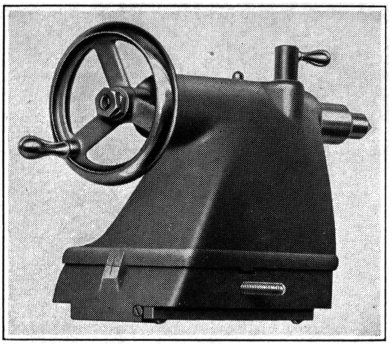

Rear View
Showing Gib

FIG. 27
The tailstock of the Atlas Lathe showing graduated ram and self-ejecting center. The heavy, well braced, grey iron casting assures plenty of strength for accurate turning between centers.

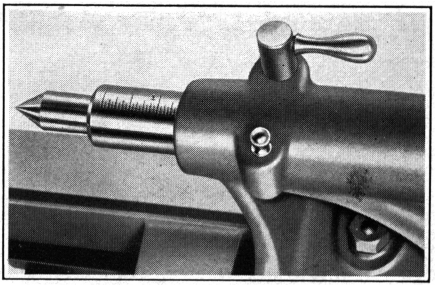

one on each end of the gib, regulate the tightness of the tailstock between the bed ways. These two screws should be adjusted evenly so that both ends of the gib will bear against the way with the same amount of pressure.

The tailstock can be set over 3/4 inch for turning tapers. This is done by simply adjusting the two headless screws after loosening the tailstock clamp nut. Taper turning and the proper realigning of the tailstock are explained in Part 8 of this Manual. Keep the ram well oiled on the outside only. Before inserting the center in the tailstock ram, clean both tapers thoroughly with a dry cloth.

LATHE CENTERS

FIG. 28
Both the headstock and the tailstock centers of the Atlas Lathe are hardened and ground carbon tool steel — No. 2 Morse Taper.

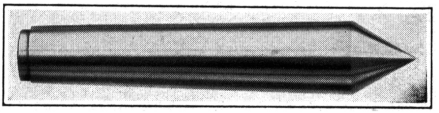

A sleeve is furnished to adapt the standard No. 2 Morse Taper Center to the No. 3 Morse Taper headstock spindle nose. Before placing centers in the lathe, clean both external and internal tapers thoroughly with a dry cloth. Any dirt or chips between these tapers will score both and destroy their accuracy. Do not oil the tapers. Even a slight film of oil will prevent a firm fit and cause trouble in turning.

It is vitally important to keep all tapers very clean.

THREADING GEARS ON THE ATLAS LATHE

All threads, either right or left hand, from 4 to 96 per inch in the following standards can be cut with the change gears furnished as standard equipment with the Atlas Lathe: all National Form threads including National Coarse (U.S.S.), National Fine (S.A.E.), Acme, Square and Whitworth. An extra bushing, spacer

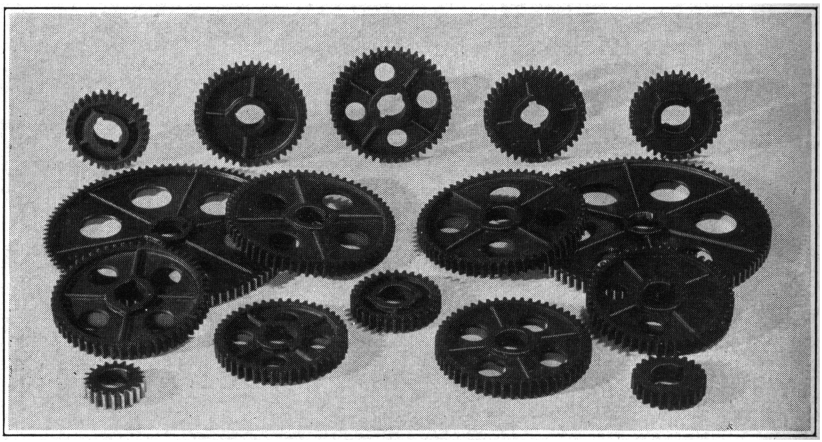

FIG. 29
Sixteen gears are furnished with each Atlas Lathe.

and chart are required for metric threads. Feeds are available for spring making, wire winding and electrical coil winding with all sizes of wire between No. 12 and 40 B. & S. and all types of magnet wire insulation. Multiple threads, machine screws, pipe-type threads and special screws can be cut with the standard gears furnished. Complete set-ups and directions for the most common threads and feeds are given in Part 7 of this Manual.

ZAMAK PARTS

An outstanding improvement in screw cutting lathe manufacture was the use of the alloy "Zamak" in the construction of the Atlas Lathe. Gears, pulleys, handwheels, reverse mechanism, lead screw bearing, and other small parts are made of this metal. Radical improvements in design and added strength have resulted.

Zamak is an alloy composed of aluminum, magnesium, copper and zinc. It has a tensile strength of 47,300 pounds per square inch, which is over three times that of cast iron. Its impact strength is nearly six times that of cast iron. Exhaustive labora-

EQUIPMENT USED IN MANUFACTURING ZAMAK PARTS FOR THE ATLAS LATHE

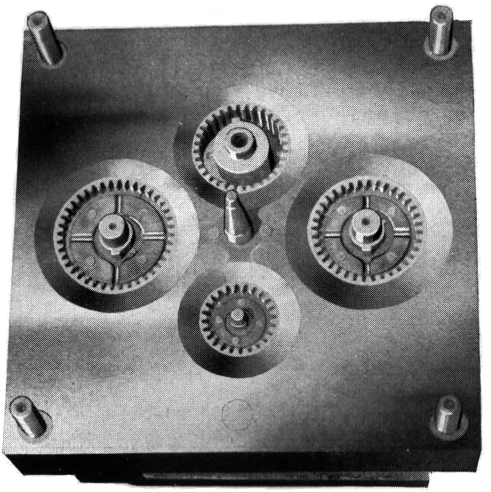

FIG. 31
The type of precision, hand made dies used in the manufacture of Zamak parts.

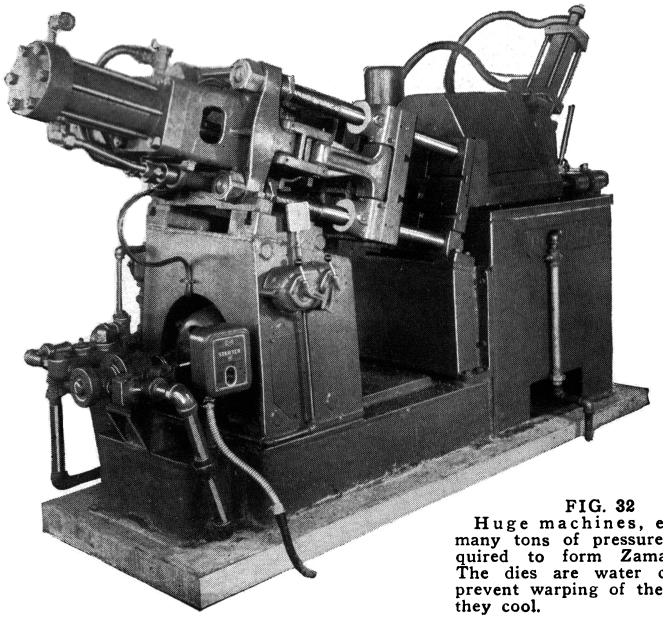

FIG. 32
Huge machines, exerting many tons of pressure, are required to form Zamak parts. The dies are water cooled to prevent warping of the parts as they cool.

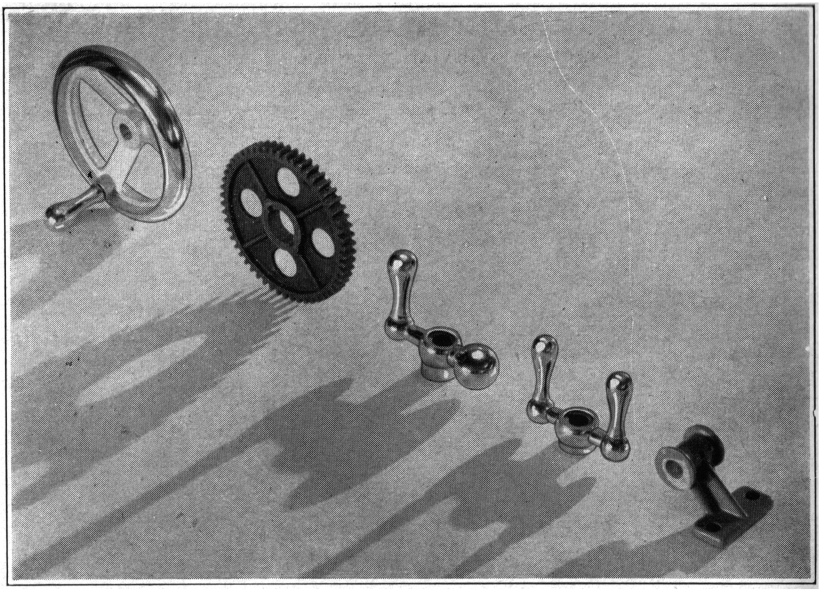

FIG. 30
Some of the parts on the Atlas Lathe which are made of the alloy "Zamak."

tory research and the practical experience of Atlas Lathe owners have proved the superior wearing qualities of Zamak.

Small part production costs are lowered by the use of Zamak. These savings make it possible to supply more complete equipment, a better bed and bearing construction, and superior accuracy on an Atlas Lathe without imposing an additional burden on the purchaser. A modern lathe requires modern manufacturing methods.

Part 2

THEORY OF METAL CUTTING

PART 2

THEORY OF METAL CUTTING

Every lathe owner should have a basic knowledge of the cutting action of the tool bit. With this knowledge the lathe tool can be properly ground and applied to the work. Extreme care is taken in the design and manufacture of the Atlas Lathe to provide maximum accuracy and rigidity. Clean, accurate lathe work results only when equal care is taken in the grinding and use of the cutting tool. In the next three sections of this Manual are given actual "reasons why" tool bits are ground to certain angles, how tools are set into the work and what tools are used for different types of work. One important point must always be remembered — *Use Sharp Tools!* Nothing is more essential for clean, accurate lathe work or does more to lengthen lathe life.

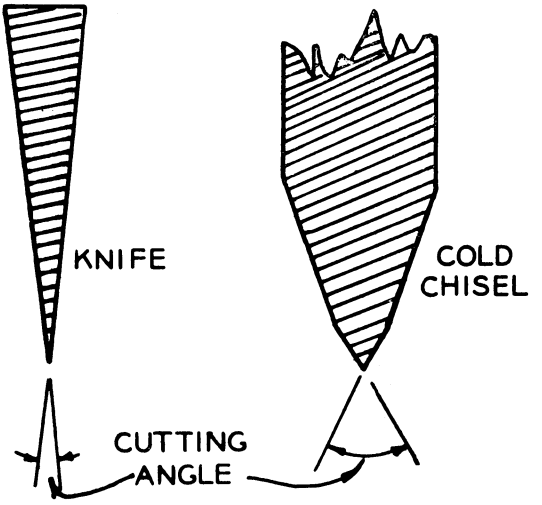

FIG. 33
Cross sections of a knife and a cold chisel, showing the great difference in cutting angles.

THE WEDGING ACTION OF CUTTING TOOLS

All cutting tools employ a wedging action. The differences are in the angle of the two sides of the tool which form the cutting edge and the manner in which the tool is applied to the work. The edge of a pocket knife would be ruined in trying to cut a nail, even though the metal in the knife is much harder than that in the nail. A cold chisel, however, shows no signs of damage in cutting the same nail, although the chisel is usually a poorer grade of steel than the knife. Obviously, the difference lies in the angle of the tool. Figure 33 shows these two tools in profile.

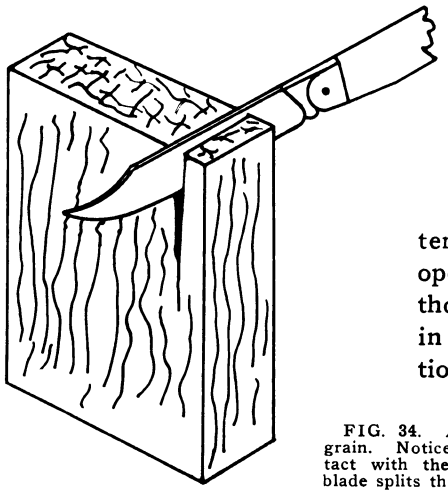

COMPARISON WITH WOOD TOOLS

Figure 34 shows the action of a knife in cutting a piece of wood. Notice that the cutting edge of the tool is used only in the first entering cut. All wood cutting tools operate on this principle, although when cutting across grain in a piece of hardwood, the action is more complex.

FIG. 34. A knife slicing a block of wood with the grain. Notice that the edge of the knife is not in contact with the wood—the wedging action of the knife blade splits the wood ahead of the edge.

In Figure 35 a wood chisel is cutting a slice across the end of a block of wood. Here the wedge of the tool acts to shear off small sections, each one a separate cutting and wedging action. If the wood fibers are strong enough, these small sections will cling together and result in a curled chip.

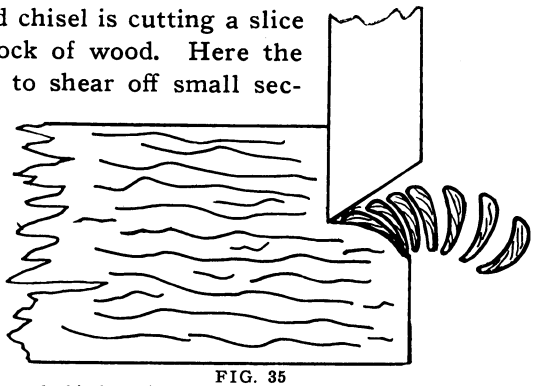

FIG. 35
A wood chisel cutting across the end of a block of hard wood. The small sections are exaggerated in size.

DIFFERENCES BETWEEN WOOD and METAL-CUTTING

Wood cutting tools are usually not clamped in a fixed position, but guided by the operator. Metal cutting, on the other hand, requires holding both the work and the tool as firmly as possible. Absolute rigidity is impossible to attain, but every effort should be made to approach it.

The cutting edge of a lathe tool for metal turning is ground to an angle of between sixty and ninety degrees. This wedge angle must be large because the tool edge must stand up under enormous pressure—an actual downward pressure as high as 250,000 pounds per square inch has been measured on a lathe tool in turning steel.

METAL CUTTING ACTION

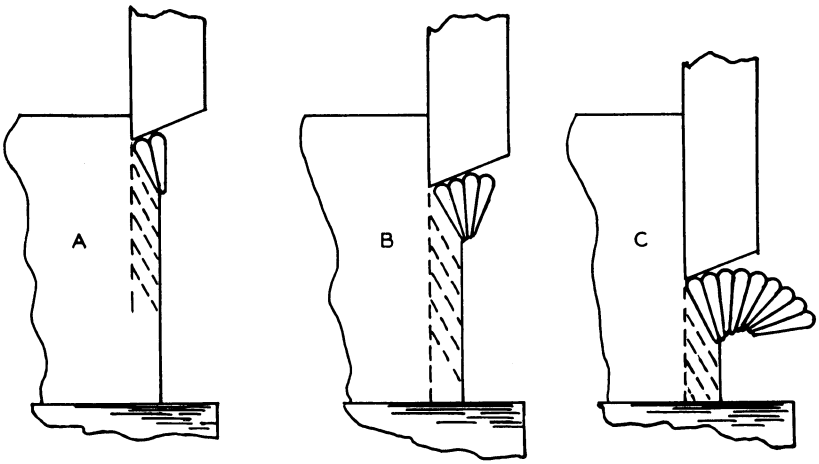

FIG. 36
Progressive steps in metal cutting. At "A" the tool is just entering the metal; at "B" the cut has progressed to a point where the triangular shape of the small sections can be seen. "C" shows the start of the curled chip. For clearness, a straight shear cut is illustrated and the size of the small sections greatly exaggerated.

Figure 36 shows the action of a metal cutting tool. It is assumed that both the tool and work are held rigidly. A shearing cut is pictured—lathe cuts are similar but made on a rounded surface.

The first action, Figure 36A, is that of the tool edge forcing into the metal—an entering cut. Figure 36B shows the wedging action more clearly, the angle of the tool forcing the metal apart and the compression squeezing the small sections into triangular shapes. Figure 36C illustrates the tool further advanced, with the sheared sections forming the start of a curled chip.

There is sufficient force from the wedge of the tool to shear off small sections of the work at short intervals. The cut is not continuous but has a finite fluctuation period measured in small fractions of a second. The wedging force rises to the shearing limit of the small section, drops and gradually rises again until the next section shears, and so on. If this fluctuation time happens to synchronize with the natural vibration period of any part of the tool, holder, or work, a vibration called "chatter" occurs.

It must be realized that the chip and the small sections in Figure 36 are greatly exaggerated in size. Actually, the chip is only several thousandths of an inch in thickness. The deformation of the metal on the inside of a reasonably thick chip can be seen clearly.

FALSE CUTTING EDGE ON THE TOOL

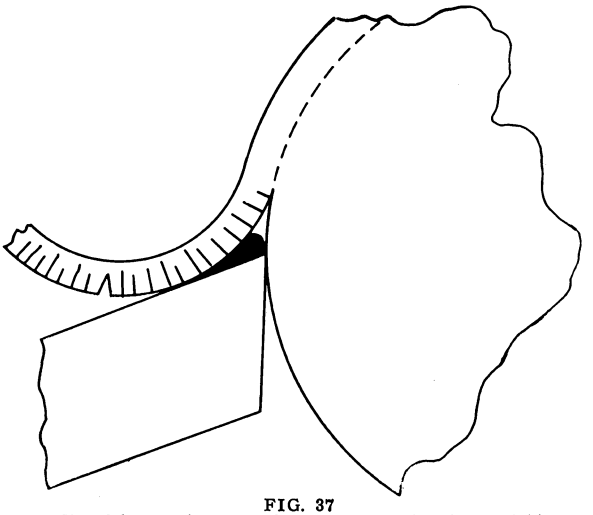

FIG. 37
The false cutting edge formed at the tip of a tool bit. The dark portion is deposited on the tool when taking heavy cuts. The wedging or cutting is done with this bit of metal, not the edge of the tool bit.

A tool bit that has been used on rather heavy cuts has a small ridge of metal directly over the cutting edge. This bit of metal is much harder than the metal being cut and is almost welded to the edge of the tool, indicating that an immense amount of heat and pressure was developed at this point.

This "false cutting edge" acts as the actual cutting edge in turning. It is a decided advantage in heavy turning because it relieves the edge of the tool bit from most of the work of cutting and lengthens tool life. For continuous heavy cuts, the speed should be kept low enough, and the rake of the tool small enough in order to build up this false edge. However, in taking fine finishing cuts, this built-up edge should be avoided by taking finer cuts at higher speeds and with larger rake angles.

There are several theories as to the forming of this false cutting edge. It is generally agreed, however, that the cutting action, aided by the heat and pressure at the end of the tool bit, causes the metal particles to deform or flow which produces what is called "work hardening" of the metal. Whether it is due to the compression of a small strip of metal ahead of the edge of the tool itself, or is simply a work-hardened portion of the main chip is a debated question. The important point to remember is that the false cutting edge is desirable for heavy cuts—on fine finish cuts it should be avoided.

THE SHARPNESS OF THE TOOL EDGE

How fine the edge of a tool bit should be depends upon the class of work (roughing or finishing) and upon the metal being cut. For heavy roughing cuts in steel, there is no point in honing the edge of the tool. A fine edge lasts for only a few feet of cutting, then it rounds off to a more solid edge and remains in approximately this same condition until the tool breaks down. A 60 grit wheel is satisfactory for grinding tools for heavy roughing cuts.

For fine finishing cuts, the tool should be ground to shape and then honed with a reasonably fine stone. In most instances, the finish is directly dependent upon the keenness of the edge of the tool. Tools for soft metals should be honed carefully to as fine an edge as possible- both the cutting action and the finished surface depend upon the edge of the tool.

For threading tools, grinding on a 60 grit wheel is sufficient for roughing cuts, but the edge of the tool should be honed before taking the finish cuts.

HEAT DEVELOPED IN CUTTING METAL

All of the power used in cutting metal is ultimately expended in heat. The shearing of the chip by the wedging action of the tool, the small sections of metal sliding over each other, the back of the chip rubbing on the face of the tool bit, the compression at the point of the tool- all of these actions generate heat which must be dissipated. The tool should have a large cutting angle to help carry this heat away from the cutting edge as rapidly as possible.

In production work, where high speed is important, coolants composed of various chemical mixtures help absorb this heat from the edge of the tool—a steady stream of cutting compound is directed at the point of the tool so that it spreads and covers both the tool and the work. A large pan under the lathe bed collects this compound, carries it to a settling tank and then to a pump.

Coolants are seldom used in small lathe work. Ordinary cutting is done dry, or sometimes with the aid of a cutting oil for lubrication only. It must be remembered when cutting dry, that the work will heat considerably higher than the surrounding temperature, often as much as 100° Fahr. This increase in temperature causes the work to expand, and the tightness of the lathe centers should be watched carefully. In taking measurements with a caliper or micrometer, be sure to cool the work before measuring to a final dimension.

Part 3

CUTTING TOOLS

PART 3

CUTTING TOOLS

LATHE TOOL BIT DESIGN

The angles of the top and sides of lathe tool bits, together with their official A.S.M.E. designations, are shown in Figures 38A, 38B and 38C.

TOP RAKE ANGLES

In the preceding section of this Manual it has been shown that the wedge or cutting angle should be as large as possible for maximum strength at the edge and to carry heat away from the cutting edge. On the other hand, the larger the wedge angle the greater the power required to force it into the work. Thus, there are two opposing factors and a compromise between them is necessary in arriving at the best rake angles. There has been a great amount of experimental work in this connection, notably by F. W. Taylor and O. W. Boston. Recommended values of both back and side rake for the various kinds of metal have been determined. Rake angles for general use with many types of metals and plastics are given in Part 4 of this Manual.

CLEARANCE ANGLES

Clearance angles allow the part of the tool bit directly under the cutting edge to clear the work while taking a chip. Too much clearance weakens the cutting edge, and the high pressure exerted downward on the tool bit demands that clearance be as small as possible and still allow the tool to cut properly.

A tool with excessive clearance also has a tendency to chatter. Taylor's experiments showed that for hand ground tools a side clearance of 12° and a front clearance of 8° is satisfactory for general turning of steel. The larger side clearance is necessary because the lathe tool feeds and cuts at the same time, making the actual path of the tool helical, or spiral, instead of straight. Recommended angles of clearance for metals other than steel are given in Part 4 of this Manual.

Whenever the tool digs into the work or refuses to cut unless forced, check the clearance of the tool bit. Digging-in occurs most often during facing and threading operations. For light turning it is usually better to allow just a little more than enough clearance rather than to risk having too little.

LATHE TOOL BIT DESIGN

OFFICIAL A.S.M.E. DESIGNATIONS OF TOOL BIT ANGLES

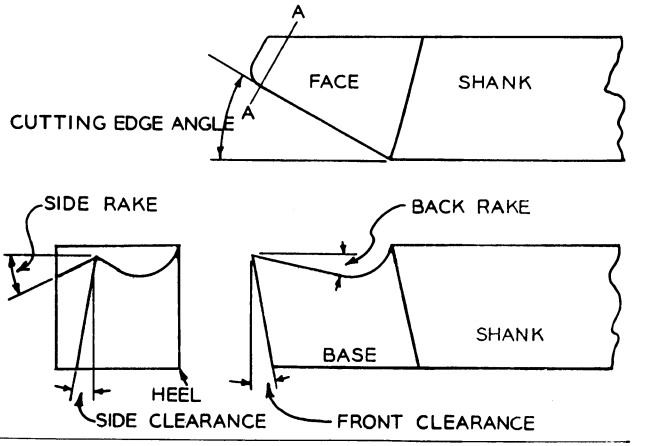

FIG. 38A

Tool bit angles with the tool bit horizontal and at a right angle with the centerline of the work.

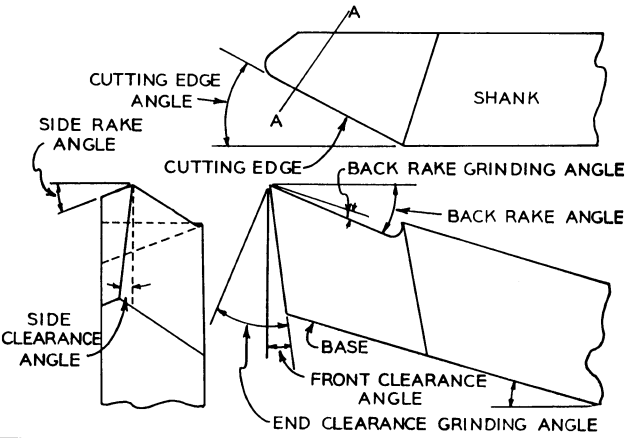

FIG. 38B

Tool bit with angles as designated for use in the tool holder.

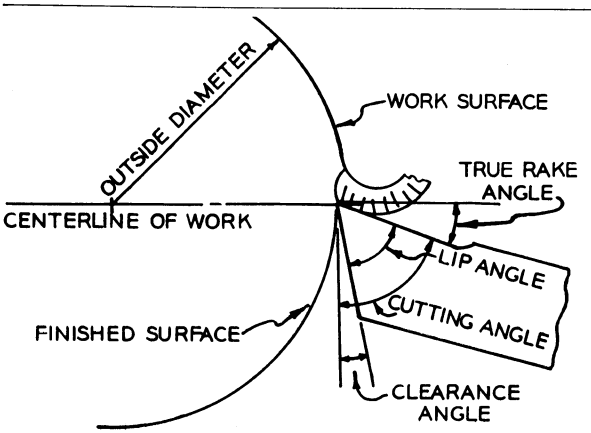

FIG. 38C

Angles of the tool bit in relation to the work.

THE TOOL HOLDER

FIG. 39

A tool holder for holding ¼" x ¼" tool bits. This holder makes unnecessary the use of larger forged tools of expensive high speed steel and provides a 16½° front rake angle without spoiling the entire end of the tool.

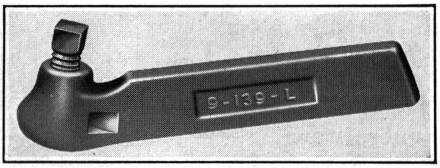

Tool holders of the type shown in Figure 39 are used universally on engine lathes, permitting the use of small, inexpensive and replaceable tool bits. The tool bit is set at an angle of 16½°. This angle serves two purposes: it provides a front rake angle without spoiling the entire end of the tool, and it directs a large portion of the cutting pressure directly toward the base of the tool post. Allowance for this 16½° angle must be made when grinding tool bits for use in the tool holder. All of the angles and diagrams in this and the following section take this angle into account.

In order to avoid undesirable overhang, tool bits should be clamped so that the cutting end of the tool bit is as close to the tool holder as the work will permit -- also the end of the tool holder which holds the tool bit should be as close to the tool post as possible.

GRINDING TOOL BITS

Figures 40 through 44 show five forms of tool bits for use in the tool holder. These shapes are suitable for practically all lathe work, with the exception of threading and inside boring. Threading and boring tools are described in later sections of this Manual. The proper tool bit angles for many types of metals, alloys and plastics are included in Part 4.

A good tool grinder is essential, preferably motor driven such as the one shown in Figure 45. The grinder should have one medium grit wheel (about 60 grit) on which high speed tool bits can be ground. Some practice is necessary before tools can be properly ground but by following carefully the directions given in this section, the beginner will soon become adept at this important part of lathe operation.

The tool can be sharpened on either the side or the face of the wheel, although the regular cutting face is used by most machinists and generally considered better grinding practice. Grind the shapes and angles as directed to within reasonable limits. Be careful not to burn the edges—a cup of water should be kept handy to cool the tool and avoid spoiling the temper of the steel.

Always keep tools sharp.

TOOL BIT SHAPES FOR USE IN THE TOOL HOLDER

The five standard tool forms on these two pages will be found suitable for most lathe turning. When grinding tools for special work, simply keep in mind the shapes and angles recommended for general turning and apply these principles to the special tool being ground. See the examples on page 41.

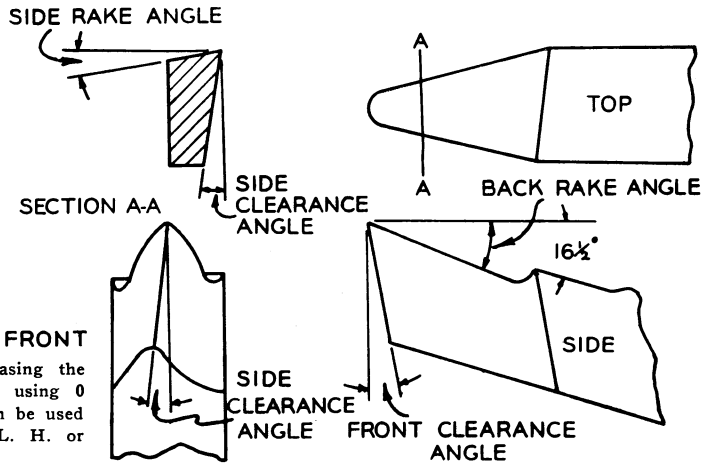

FIG. 40
A round nose R. H. Cutting Tool Bit, suitable for roughing and general purpose turning. By increasing the front rake and using 0 side rake, it can be used to cut either L. H. or R. H.

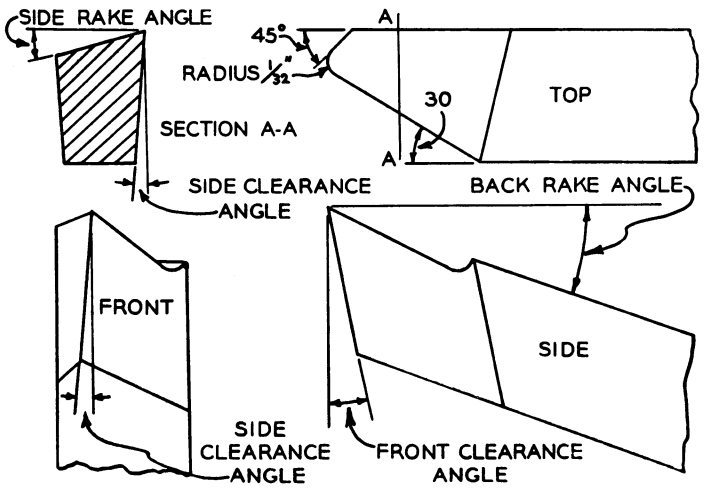

FIG. 41
A R. H. Turning Tool Bit, used for general turning and finishing when cutting toward the headstock.

FIG. 42

A L. H. Turning Tool Bit, used for general turning and finishing when cutting toward the tailstock.

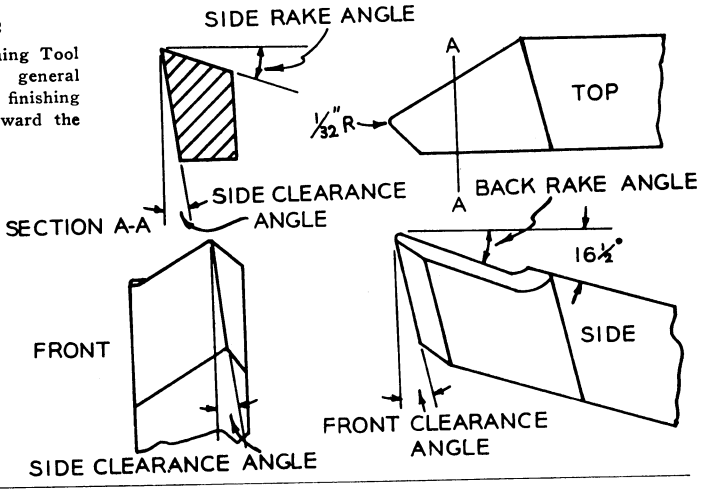

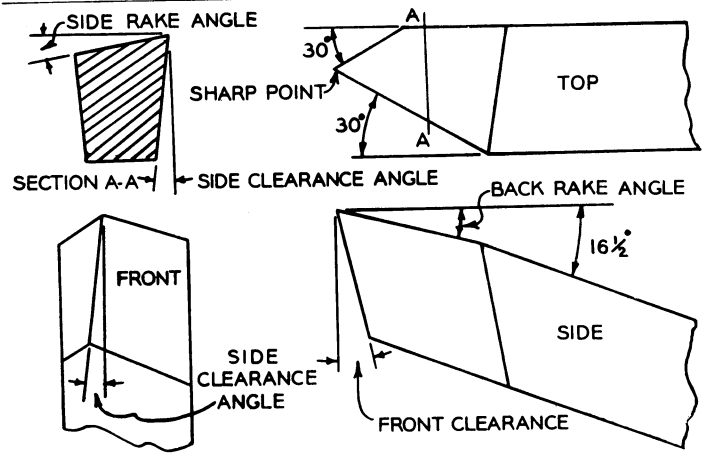

FIG. 43

A R. H. Side Cutting and Corner Tool Bit, used for side faces, shoulders, corners, etc., when cutting toward the headstock.

FIG. 44

A L. H. Side Cutting and Corner Tool Bit, used for side faces, shoulders, corners, etc., when cutting toward the tailstock.

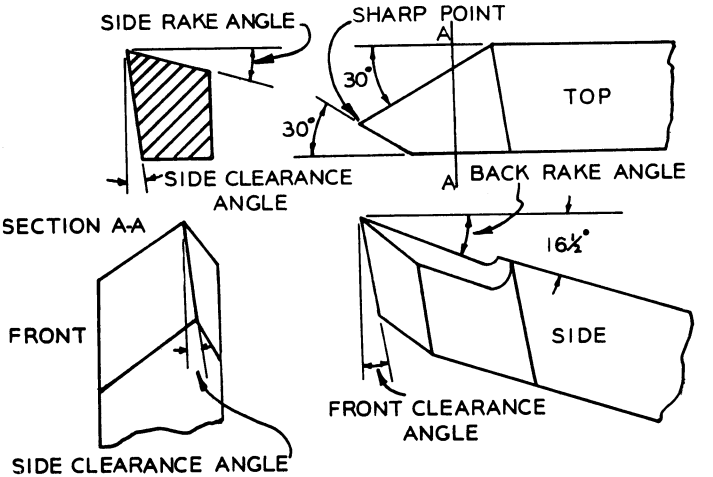

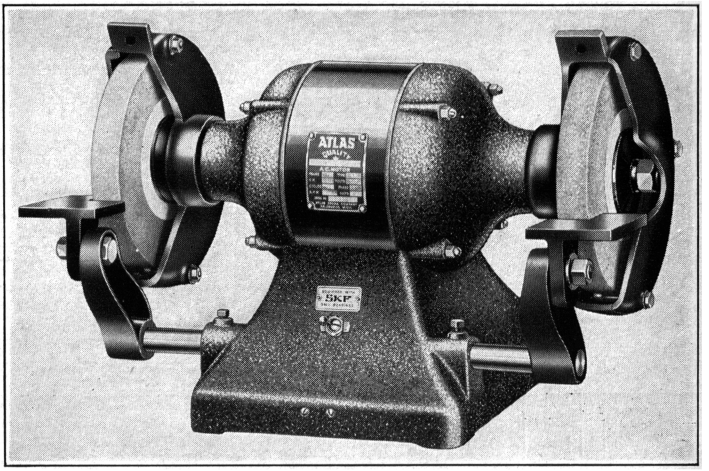

FIG. 45

An ideal type of tool grinder. A ⅓ or ½ H. P. 3450 R. P. M. motor, fully enclosed and protected from dust, furnishes power for fast, accurate grinding. The right wheel is used for rougher grades of work and the left for smooth finishing. Floor pedestals, water pot and safety eyeshields are available.

Using the type of grinder shown in Figure 45, the tool is roughed to shape on the coarse wheel and finish ground on the fine wheel. A properly ground tool will have continuous wheel marks on each face—that is, each face is one clean cut all the way across. The beginner can grind tools quite accurately by comparing each side of the tool with the angles given in the drawings on pages 36, 38 and 39, while grinding the tool.

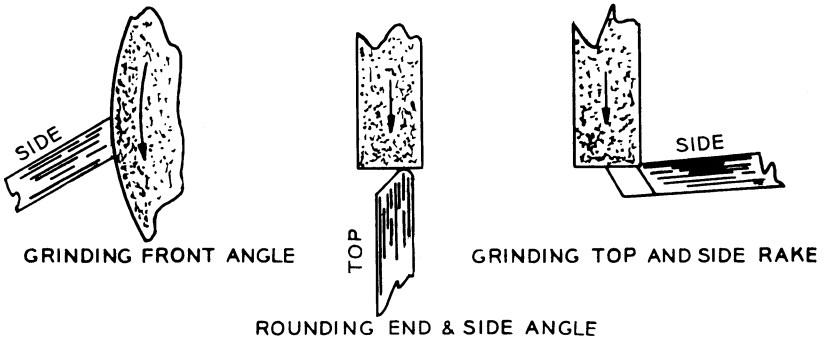

FIG. 46. Three views of the process of grinding a R. H. turning tool bit.

SPECIAL FORM-CUTTING TOOLS

In using form tools with side faces such as shown in Figures 47A and 47D, side rake is out of the question. Front rake, however, should be used except when turning brass. It is recommended that tools wider than 1/8" never be used on steel. Form cutting tools as wide as 1/2" can be used on brass, aluminum and similar metals.

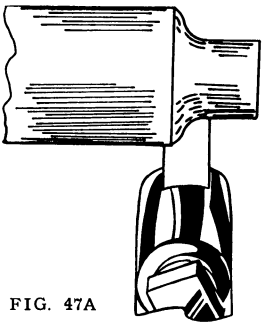

FIG. 47A

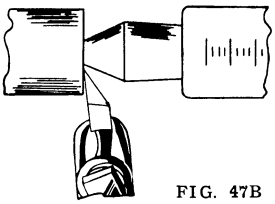

FIG. 47B

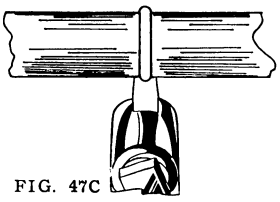

FIG. 47C

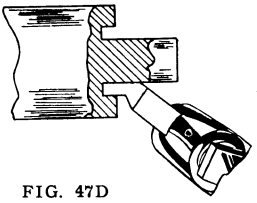

FIG. 47D

SPECIAL ROUGHING TOOL BIT

For heavy work in steel, many machinists use a tool ground as shown in Figure 48. By grinding a groove along the edge of the tool only, instead of grinding the top of the tool away at an angle, a large side rake angle can be obtained without unduly weakening the tool. This type of tool is used in taking the heavy cut shown in Figure 57.

The radius of the groove determines to a large extent the diameter of the chip curl. This entire groove should be honed as smooth as possible because the entire face of the chip bears on the surface of this groove and any roughness increases friction and heat.

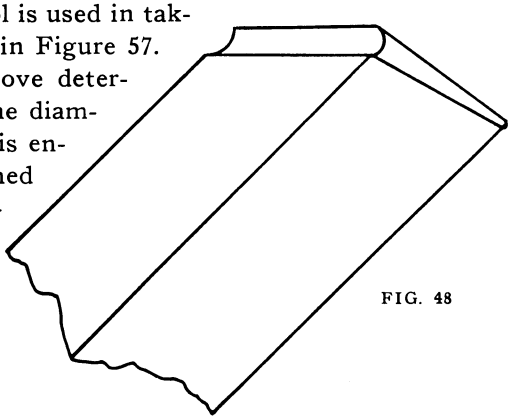

FIG. 48

SETTING THE TOOL TO THE WORK

The tool shapes and angles appearing on the following pages show the tool being set approximately at right angles to the center line of the work (the line between the lathe centers).

The true rake angle of a tool bit is a combination of the front and side rake (see Fig. 38C) and can be changed slightly by swinging the tool at an angle with the work. For some cuts it is necessary to set the tool at an angle, and occasionally it will result in cleaner cuts and less chatter. Generally, however, the tool should be set directly into the work or at a slight angle as shown in Figure 49.

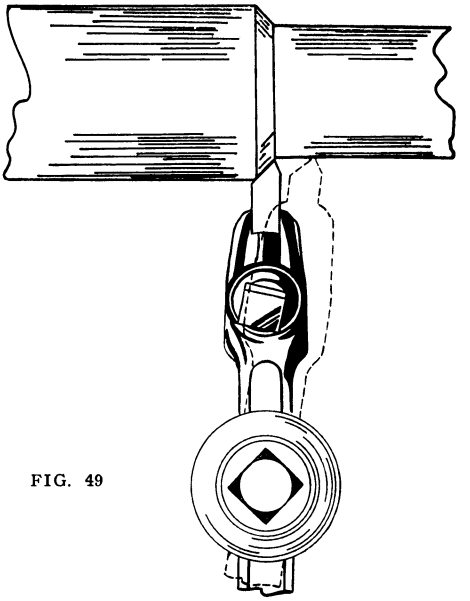

FIG. 49

TYPES OF TOOL HOLDERS

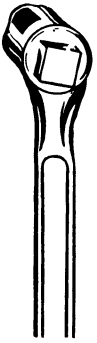

FIG. 50A

Top view of a R. H. Tool Holder. Used for cutting up to chucks, face plate, dogs, etc. at the headstock end of the work.

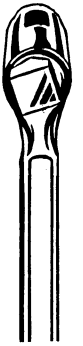

FIG. 50B

A Straight Tool Holder. Used for general cutting where no clearance is needed.

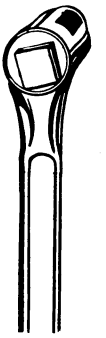

FIG. 50C

A L. H. Tool Holder. Used for cutting up to shoulders, projections, etc. at the tailstock end of the work.

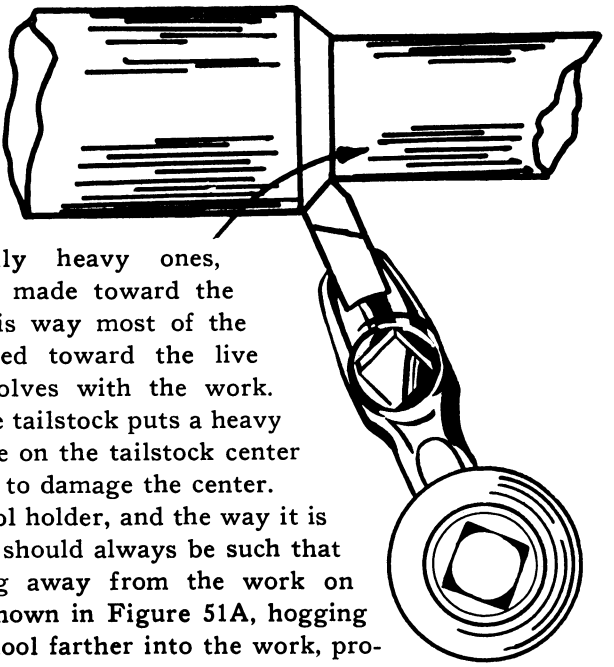

FIG. 51A

When the tool is set like this, it tends to swing into the work on heavy cuts, producing rough work.

Cuts, especially heavy ones, should always be made toward the headstock. In this way most of the pressure is directed toward the live center which revolves with the work. Cutting toward the tailstock puts a heavy additional pressure on the tailstock center and is quite likely to damage the center.

The type of tool holder, and the way it is set into the work, should always be such that it tends to swing away from the work on heavy cuts. As shown in Figure 51A, hogging tends to pull the tool farther into the work, producing a rough, inaccurate cut. If the tool is set as shown in Figure 51B, it swings out away from the work. When cutting at an angle with the compound rest, the tool should be set at a right angle to the surface of the cut, not at a right angle to the center line of the lathe.

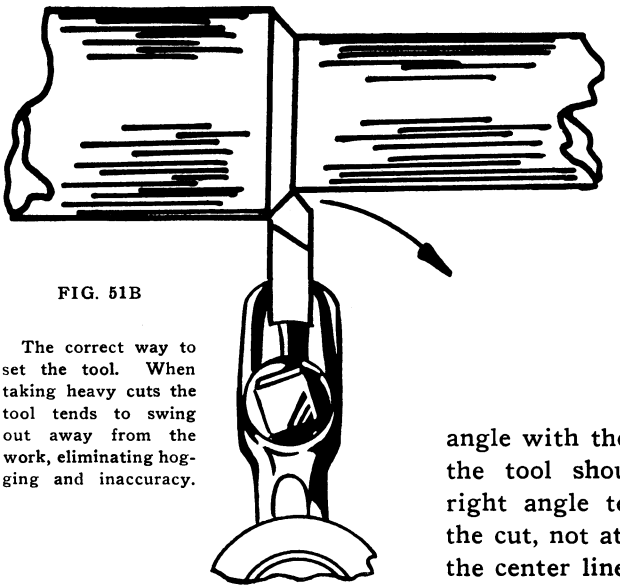

FIG. 51B

The correct way to set the tool. When taking heavy cuts the tool tends to swing out away from the work, eliminating hogging and inaccuracy.

FACING CUTS ON THE LATHE

Facing cuts represent different cutting relations and tool angles, and tools should preferably be special ground for that purpose. Smoother cutting and a finer finish can be obtained generally by cutting toward the outside—that is, feeding from the center of the work out. Inasmuch as the tool must cut to the center, larger clearances should be used than when turning cylindrical work.

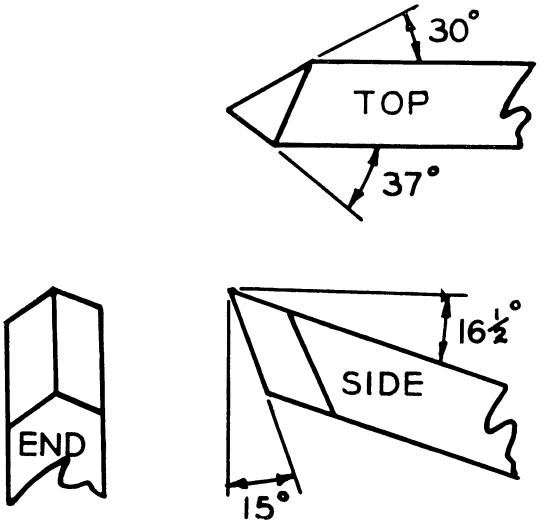

FIG. 52
An excellent tool bit for facing, designed to cut from the inside toward the outside.

Although ordinary R. H. cutting tools can be used for small amounts of facing work, any large amount of facing should be done with a tool ground especially for the purpose. Figure 52 shows a tool which will be found excellent for this type of cutting. It is designed to cut from the center of the work toward the outside. Notice that the shape differs somewhat from that of a standard turning tool, the effective rake of the cutting edge being dependent upon the rake angle shown. This rake angle should be the same as, or slightly greater than, the angles given for front rake for the various metals and plastics in the following section of this Manual.

The clearance angles of 15° are suitable for facing practically any material. Figure 53 shows how the tool should be set into the work.

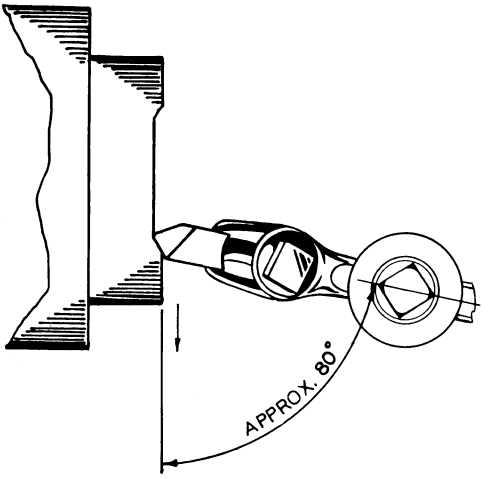

FIG. 53

When facing with a tool of the type shown in Figure 52, the tool should be set to the work in this manner. The angle of 80° is approximate and can be changed for the different types of facing tools.

SET THE POINT OF THE TOOL ON THE CENTER LINE

If the tool is ground properly, the point of the tool will not have to be set above or below the center line of the work. Figure 54A shows a tool bit with an 8° front clearance set into a piece of work exactly on the center line. The clearance angle is measured between the tool and the line AB, which is tangential to the work at the point of contact of the tool. The front rake is measured

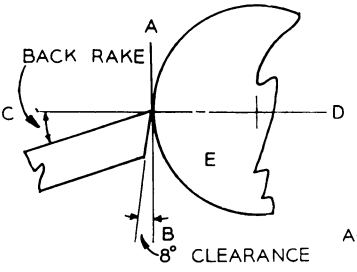

FIG. 54A

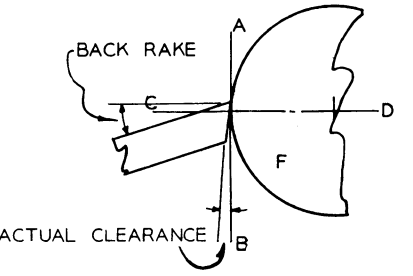

FIG. 54B

between the tool and the line CD, which is a radius of the work to the point of contact and is at right angles to the line AB.

Now, if the same tool is set above center as shown in Figure 54B, an entirely different condition exists. The front clearance is still measured between the tool and the tangential line AB, but AB is no longer vertical and the angle of clearance has been greatly reduced. The radius line CD has also been moved so that the

back rake angle is now larger. A tool set to the work in this position would have to be ground entirely different in order to cut correctly.

A tool with an 8° front clearance, working on a piece of stock one inch in diameter, would have to be set only a trifle more than 1/16 inch above center in order to have the line AB coincide with the front line of the tool, producing a zero clearance. With the same setting, an original back rake of 20° would became 28°.

Some machinists make a practice of setting tools above the center line, but they must grind their tools especially for that type of setting. For the average operator, student or beginner, it is recommended that the tool bit be ground to the given angles and set exactly on the center line.

Several methods can be used to set the tool on the center line. The point can be lined up with either of the lathe centers, or the distance from the bed way to the headstock center can be measured and transferred. Another excellent method is to scribe a line along the tailstock ram: set a sharp pointed tool sidewise in the tool holder and align it with the headstock center. Then use this pointed tool to scribe a light line along the side of the tailstock ram (remove burr). This line will serve as a guide to set the tool, even when the work is in position between centers.

Part 4

THE MACHINING OF VARIOUS MATERIALS

PART 4

THE MACHINING OF VARIOUS MATERIALS

PROPER CUTTING SPEEDS

Much of the success in metal cutting depends upon the choice of the cutting speed. Too slow a speed not only wastes time, but leaves a rough finish—too high a speed burns the tool. Sixteen speeds are available on the Atlas Lathe, eight on direct drive and eight on backgear drive. Figure 55 lists these speeds and shows how they are obtained.

FIG. 55. SPINDLE SPEEDS IN REVOLUTIONS PER MINUTE
ATLAS 10-INCH BACK GEARED LATHE

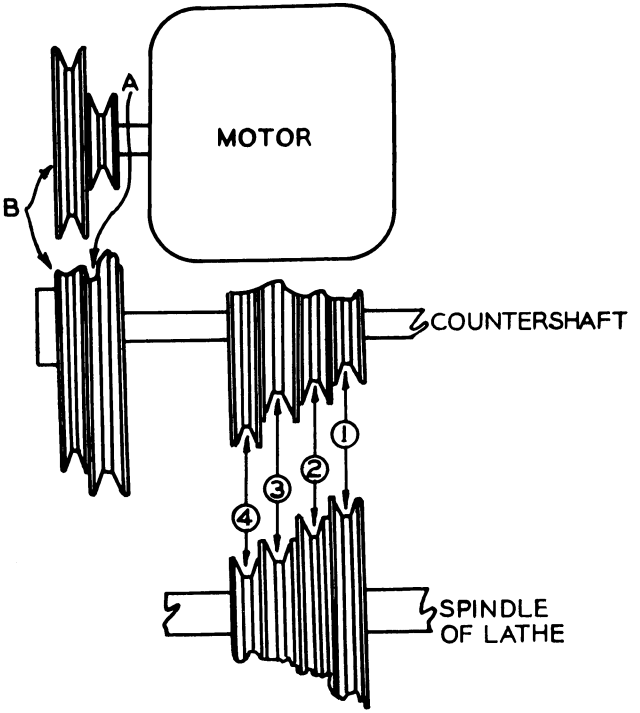

BACK GEAR DRIVE					DIRECT CONE DRIVE				
Motor Belt Position	Spindle Belt Position				Motor Belt Position	Spindle Belt Position			
	1	2	3	4		1	2	3	4
A	28	45	70	112	A	164	266	418	685
B	83	134	211	345	B	500	805	1270	2072

Consult Index for spindle speeds of Atlas 9-inch and Unit Plan Lathes.

Cutting speeds for metal turning are usually expressed in feet per minute, measured on the circumference of the work. Spindle revolutions per minute are then determined by using this formula:

$$\frac{12 \times \text{SFM}}{3.1416 \times \text{D}} = \text{RPM}$$

which is simplified to

$$\frac{3.82 \times \text{SFM}}{\text{D}} = \text{RPM}$$

where SFM is the rated surface feet per minute
RPM is the spindle speed in revolutions per minute
D is the diameter of the work in inches.

In order to simplify the selection of the proper speed, Figure 56 gives the exact speeds obtainable on the Atlas Lathe, which correspond approximately to surface speeds in feet per minute for the various work diameters. Thus, knowing the surface speed recommended for various metals and plastics, first use Figure 56 to find the proper lathe speed for the diameter being turned, then refer to Figure 55 for the correct belt set-up to obtain that speed.

DEPTH OF CUT AND FEED PER REVOLUTION

The speeds recommended for the various metals and plastics are for cuts of 1/8 of an inch or less in depth. The harder the metal, the less the depth of cut should be. Ordinary turning does not demand unusually deep cuts—more metal per minute can usually be removed by turning at recommended speed with a roughing cut of between .100 and .125 inch in depth.

Finish cuts are taken after the roughing cuts and should be approximately .015 inch or less in depth, taken at the recommended speed. The work can be roughed down to within approximately .015 inch of the final diameter, then finished with a sharp tool, using light cuts. Before taking finish cuts to size be sure that the work has cooled to approximately room temperature—the shrinkage of a hot piece of work can easily spoil the intended fit.

The four most common carriage feeds on the Atlas are shown on the threading chart (Fig. 125): .0087, .0060, .0043, and .0033

FIGURE 56

TABLE OF CUTTING SPEEDS

Actual Speeds Obtainable on the Atlas Lathe to Give Approximately the Surface Speeds Shown

Diameter of Work Inches	*Surface Speed in Feet Per Minute*											
	30	*40*	*50*	*60*	*70*	*80*	*100*	*120*	*150*	*200*	*300*	*500*
1/16	2072	—	—	—	—	—	—	—	—	—	—	—
1/8	805	1270	1270	2072	2072	2072	—	—	—	—	—	—
3/16	685	805	805	1270	1270	1270	2072	2072	—	—	—	—
1/4	418	685	805	805	805	1270	1270	2072	2072	—	—	—
3/8	266	418	500	685	685	805	805	1270	1270	2072	—	—
1/2	266	266	418	418	500	685	685	805	1270	1270	2072	—
5/8	164	266	266	418	418	500	685	685	805	1270	2072	—
3/4	164	164	266	266	418	418	500	685	805	1270	1270	2072
1	112	164	164	266	266	266	418	418	500	805	1270	2072
1 1/4	83	112	164	164	164	266	266	418	418	685	805	1270
1 1/2	70	112	112	164	164	164	266	266	418	500	805	1270
1 3/4	70	83	112	112	164	164	164	266	266	418	685	1270
2	45	70	83	112	112	164	164	266	266	418	500	805
2 1/2	45	70	70	83	112	112	164	164	266	266	418	805
3	45	45	70	70	83	112	112	164	164	266	418	685
3 1/2	28	45	45	70	70	83	112	112	164	164	266	500
4	28	45	45	45	70	70	83	112	164	164	266	500
5	28	28	45	45	45	70	70	83	112	164	266	418
6	28	28	28	45	45	45	70	70	83	112	164	266
7	28	28	28	28	45	45	45	70	83	112	164	266
8	28	28	28	28	28	45	45	45	70	83	164	266
9	28	28	28	28	28	28	45	45	70	83	112	164
10	28	28	28	28	28	28	45	45	45	70	112	164

inches per spindle revolution. Ordinary cutting, where the final finish can be touched up by filing and with emery cloth, should be done with the .0087 inch feed. The .0043 and .0033 inch feeds are used for a fine finish and for working on tough, hard-to-machine metals. The .0033 inch feed is ideal for taking trueing cuts on commutators. The .006 inch feed is an intermediate feed often useful for work not falling into these other classes. Gear set-ups for the various carriage feeds are given in Part 7.

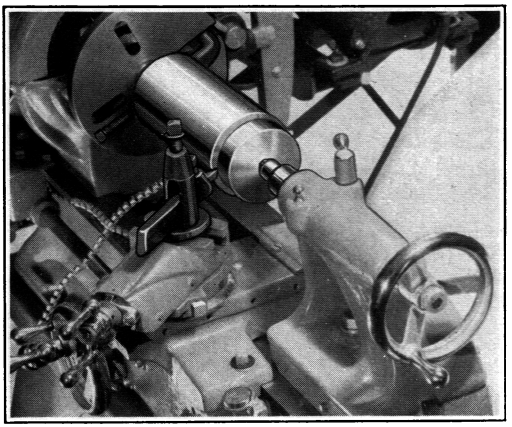

FIG. 57

Reducing the diameter of a steel shaft ½" in one cut. Except for the experienced machinist cuts like this should never be taken—use the speed recommended for the metal being turned and take cuts of about ⅛ of an inch for roughing.

CUTTING COMPOUNDS

Ordinary turning on the lathe is done dry. During threading operations the use of a cutting compound, oil or fluid results in a better class of work. Lard oil or any one of the general purpose cutting fluids should be kept handy for this purpose. Continuous production work usually requires the use of liberal quantities of a cutting compound to carry the heat away from the tool bit.

MACHINING STEEL

Steel is manufactured in hundreds of grades, each with a different carbon and alloy content. The grades of steel listed and described in this Manual are carried in stock by most steel suppliers. They are purchased from the warehouse by their S.A.E. (Society of Automotive Engineers) numbers, listed in detail in Part 10. Some of the harder grades should be purchased annealed for machining purposes.

The tool angles and cutting speeds given in Figure 59 are approximate and will be found suitable for average work. They

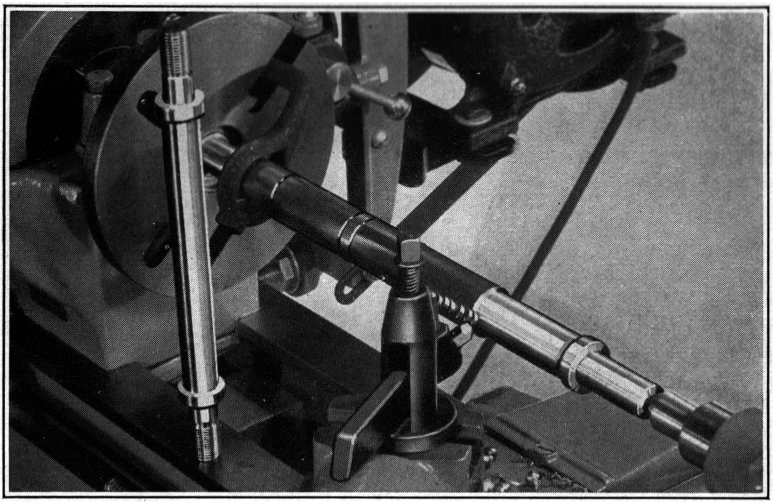

FIG. 58
A small alloy steel grinder shaft being turned in the lathe. The finished shaft is also shown. Note the grooves made by the cut-off tool for blocking out the work for roughing (see page 162).

represent the consensus of opinion of a large number of factories, steel companies and machinists. It is impossible to give precisely the tool angles and speeds most satisfactory for each grade of steel, since feeds, depths of cuts, temper of work and other conditions vary for each job. Some experimenting may be necessary for production work, form tools and special shapes.

The machinability rating of each steel is an arbitrary figure determined by averaging machining time over hundreds of jobs and operations. Using S.A.E. 1112 steel as a basis and rating it 100%, the percentages given for the other steels indicate the ease of machining, or machinability—the lower the rating the more difficult is the machining.

In general, for steel, the cutting angles of the tool should be as small as can be used without hogging or having the tool edge break down too soon. The front clearance of 8° and side clearance of 10° to 12° are fairly standard for hand ground tools. Smaller clearance angles can be used in some cases, but are not recommended except for production work.

On screw machine work where a long, curled chip is undesirable, the rake angles of the tools should usually be reduced in order to break up the chips. More power will be required when using these smaller rake angles.

FIGURE 59

TOOL ANGLES AND SPEEDS FOR MACHINING STEEL

Description of Steel	S.A.E. No.	Machinability	Speed feet per minute	Side Clearance Angle	Front Clearance Angle	Back Rake Angle	Side Rake Angle
Bessemer Screw Stock	1112	100%	120	12°	8°	16½°	22°
Special Screw Stock	X1112	120	150	12°	8°	16½°	22°
High Manganese Screw Stock	X1314	95	100	12°	8°	16½°	22°
High Manganese Screw Stock	X1315	95	100	12°	8°	16½°	22°
High Manganese Screw Stock	X1335	75	100	12°	8°	16½°	18°
Open Hearth Screw Stock	1120	80	100	12°	8°	16½°	18°
Carbon Steel	1020	60	80	12°	8°	16½°	14°
Carbon Steel	X1020	70	80	12°	8°	16½°	14°
Carbon Steel	1035	62	80	12°	8°	16½°	14°
Carbon Steel	1040	61	80	12°	8°	16½°	14°
Nickel Molybdenum	4615	60	80	12°	8°	16½°	14°
Carbon Steel	1045	55	70	10°	8°	12°	14°
3½% Nickel Alloy	2315	50	80	10°	8°	12°	14°
3½% Nickel Alloy	2320	50	80	10°	8°	12°	14°
3½% Nickel Alloy	2330	50	80	10°	8°	12°	14°
3½% Nickel Alloy Annealed	2335	50	70	10°	8°	12°	14°
Nickel Chromium Alloy	3115	50	70	10°	8°	12°	14°
Nickel Chromium Alloy	3120	50	70	10°	8°	12°	14°
Chrome Molybdenum	4140	50	70	10°	8°	12°	14°
Manganese Alloy	T1335	50	60	10°	8°	12°	14°
3½% Nickel, Annealed	2340	45	70	10°	8°	10°	12°
3½% Nickel, Annealed	2345	45	60	10°	8°	10°	12°
3½% Nickel, Annealed	2350	40	50	10°	8°	10°	12°
Nickel Chromium	3130	45	70	10°	8°	10°	12°
Nickel Chromium, Annealed	3135	45	60	10°	8°	10°	12°
Nickel Chromium, Annealed	3140	45	60	10°	8°	10°	12°
Chrome Vanadium, Annealed	6140	40	60	10°	8°	10°	12°
High Carbon Steel	1095	35	50	10°	8°	8°	12°
Nickel Chromium, Annealed	3250	35	50	10°	8°	8°	12°
Chrome Vanadium, Annealed	6145	35	50	10°	8°	8°	12°

High speed tool bits are perfectly satisfactory for turning any of the steels listed in Figure 59. As mentioned before, tools for roughing cuts can be ground satisfactorily on a 60 grit wheel without honing. For finish cuts, the tool should be honed to as fine an edge as possible.

The cutting speeds are given in surface feet per minute; for the correct lathe spindle speed see Figure 56. Speeds shown are for machining dry. For best results and easier machinability, lard oil, or equivalent should be used, especially with the harder-to-machine steels. A lubricant also permits approximately 25% higher cutting speeds. For production and automatic screw machine work, commercial types of sulphurized mineral oils, or base compounds mixed with mineral oil or water are used both as coolants and for their lubricating properties.

In machining the softer grades of steel, roughing cuts can be taken with the .0087 inch feed, with depths of cuts of about 1/16 to 1/8 inch when turning at the rated speed. Deeper cuts can be taken easily at slower speeds, but it is recommended that the machinist never take roughing cuts of more than 1/8 inch—deeper cuts at rated speeds require a larger driving motor than the size recommended for the lathe. Finish cuts can be taken with any of the four feeds available, the finer feeds producing the smoothest finish. The depth of finish cut should be approximately .015 inch.

A little experimenting soon tells the operator the proper feed and depth of cut for a given steel. The figures in Figure 59 are suggestions only, and the machinist can usually tell from experience and "feel" just how much cut and feed to use.

MACHINING TOOL STEELS

It is impossible to group the many hundreds of tool steels or give definite tool angles or any description of their properties. Only annealed tool steels should be machined on the lathe. Some experimenting is necessary to determine the proper rake and clearance angles for tool bits. The harder grades, such as high speed tool steel or high carbon steel, will machine best with tool angles similar to those given for S.A.E. 1095 steel in Figure 59. Some of the die steels, while exceptionally hard when tempered,

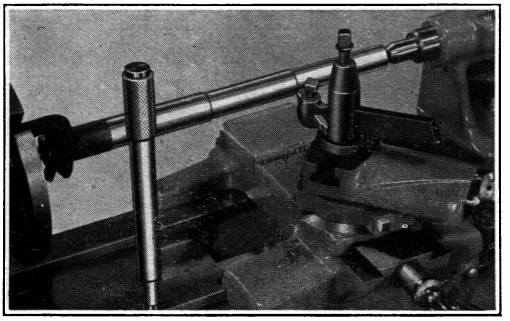

FIG. 60

Machining a bushing driver from tool steel. The finished tool is also shown. Tool angles for tool steel will require some experimenting on the part of the operator —there are hundreds of grades, each having different characteristics.

are furnished annealed. These steels can be machined best with rake angles as large as those recommended for S.A.E. 1112 steel in Figure 59.

MACHINING FORGED STEEL PARTS

Forgings are made from practically any type of steel and are usually annealed after forging. They are machined in the same manner as the bar stock from which they are made (see Fig. 59). Cuts should be deep enough to cut through the scale.

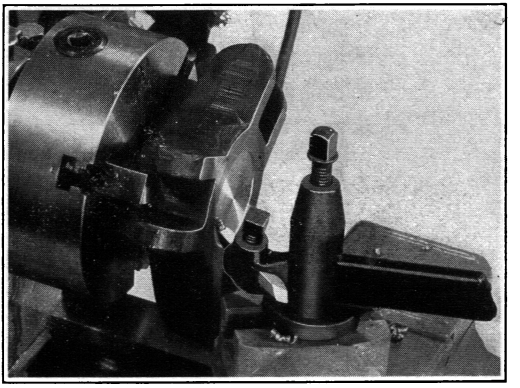

FIG. 61
Machining a forged machine part on the lathe.

MACHINING CAST IRON

Common cast iron, sometimes called "grey iron," is not so easy to machine as soft steel, nor can it be turned at so high a speed. The structure of this metal causes the chips to break out in small sections, not in a continuous chip. Rake angles must be smaller than for the softer steels. The tool nose should be sharper than for steel.

Approximate Tool Angles for Cast Iron

Front Clearance	8°
Side Clearance	10°
Back Rake	5°
Side Rake	12°

A turning speed of 50 feet per minute is generally satisfactory for cast iron, although higher speeds are sometimes used in production or with special tool bits.

CUTTING BENEATH THE SCALE

A hard scale containing sand particles forms on the outside of iron castings. Unless the first cut is taken deep enough to cut through this scale and into the softer metal, the cutting edge of the tool will be dulled quickly. First cuts on castings should be at least 1/16 or .0625 inch in depth. A speed slower than 50 feet per minute may be necessary for this depth of cut, but the speed should be reduced, not the depth of cut.

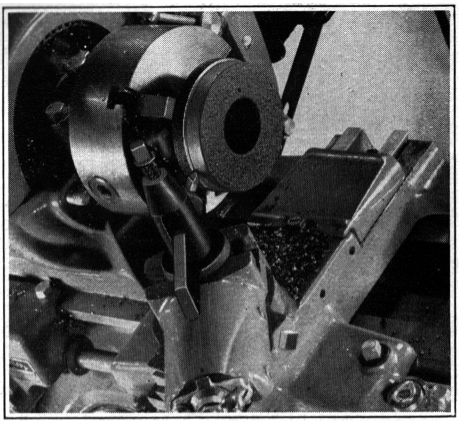

FIG. 62

Machining a cast iron collar on the lathe. Note that the cut is deep enough to get beneath the scale.

The .0087 inch feed can be used for turning most cast iron, with a depth of cut of between 1/16 and 1/8 inch running at rated speed after the scale is removed. In this connection it is interesting that much superior finishes can be obtained on cast iron by the use of high speeds and shallow cuts. Exceptionally fine finishes have been produced with speeds as high as 150 feet per minute, a depth of cut of .015 inch and the .0087 inch feed.

Cast iron is machined dry, with no lubricant or cutting oil. The structure of the metal contains a great deal of free carbon which provides the needed lubrication.

Cast iron parts that are to be machined to very accurate limits should be rough turned to within .015 to .030 inch of their finished size, and then allowed to age for three months or longer. Internal strains are set up in the metal while it is being cast, and if time is not allowed for these strains to normalize, the casting will warp after it is machined.

MACHINING STAINLESS STEEL

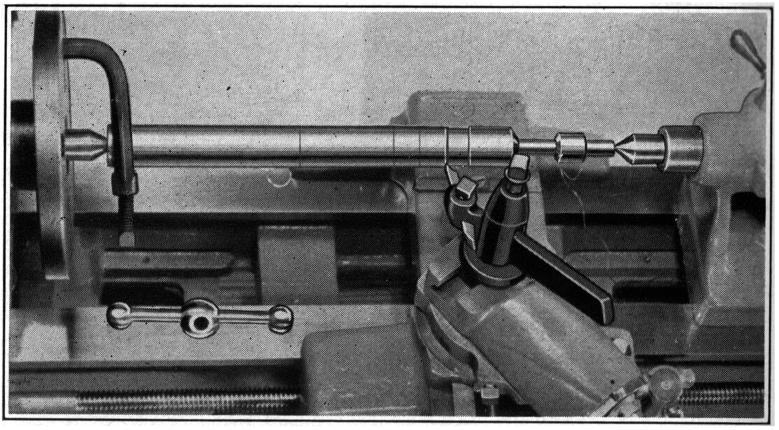

FIG. 63
Machining a stainless steel handle for use on a creamery plant machine.
These steels are often used where corrosion must be avoided.

Stainless steels are either high chromium (12 to 14% chromium) or chrome-nickel (18% chrome, 8% nickel). The addition of this alloy makes stainless steels highly resistant to corrosion as well as unusually tough and strong—they are being used more and more wherever these qualities are desired. Some stainless steels are hard to machine, but if proper grades are selected they will machine fairly well. Two grades, No. 303 and No. 416, are furnished as "Free Machining Quality" in rod and bar form and can be obtained from your steel supply house.

Stainless steel is a tough, draggy metal and requires more rake than would be expected. Small rake angles will invariably cause hogging, and the material will "work-harden" badly, that is, the action of the tool in cutting causes the surface of the finished work to harden.

To prevent rubbing, clearance angles are slightly more than standard. Threading tools should have a pronounced side rake of 5° to 10°. Chips produced when turning stainless steel are stringy and hard to manage and should be pulled away from the work. They will be hot and sharp and should be handled with heavy cotton gloves or a thick cloth.

Tool angles suitable for most grades of stainless steel:

Front Clearance ..... 10°	Back Rake ..... 16½°
Side Clearance ..... 12°	Side Rake ..... 10°

The tool angles on page 56 and the following speeds and feeds apply to both Nos. 303 and 416. Some experimenting may be necessary for other grades. These figures can be changed somewhat if conditions are unusual.

Slow speeds and heavy cuts are best for turning stainless steel. Speeds of 40 feet per minute will be satisfactory in most cases—much higher speeds cause the tool to break down after a short time. For roughing, the .0087 inch feed should be used with depths of cuts of between 1/16 and ⅛ inch. Finish cuts should be taken with a well rounded tool, preferably using the .0043 inch feed, and with a depth of cut of .010 to .015 inch or more. If possible, only one finish cut should be taken—the work-hardening of the metal makes a second shallow cut difficult.

Both No. 303 and No. 416 can be cut dry, but a standard lubricant results in a better finish and easier cutting. High-sulphur cutting compounds, lard oil or equivalent will be found satisfactory. A lubricant should always be used when threading.

CAUTION: When machining stainless steel, check the tightness of the work between centers after each cut. When heated, stainless steel expands approximately twice as much as ordinary steel, especially when cut dry. The tailstock center can be ruined quickly if extreme care is not taken in keeping just the right amount of pressure between the centers.

This tendency to heat up must be remembered when turning pieces to an exact size, and measurements should not be taken while the work is hot. A good method is to rough down to within about .015 inch of the finished diameter, remove the work and cool it with water or oil, then mount it and proceed to take the finishing cuts.

MACHINING COPPER

Copper, due to its combination of toughness and softness, requires different tools than brass or other copper alloys. These tool angles will generally prove satisfactory:

Front Clearance ..... 12°	Back Rake ..... 16½°
Side Clearance ..... 14°	Side Rake ..... 20°

MACHINING COPPER (Continued)

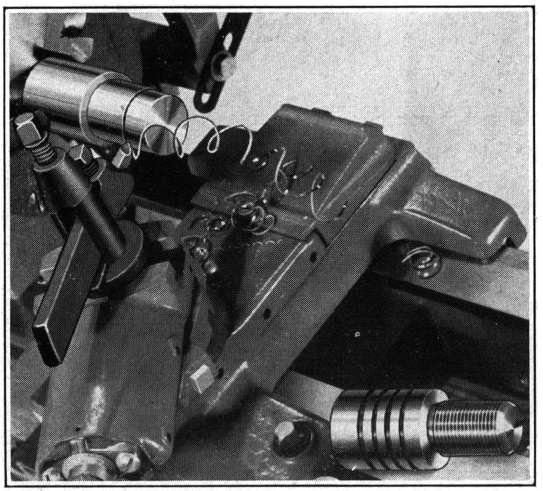

FIG. 64
Machining a solid copper electrode on the lathe. A finished electrode is also shown.

A turning speed of 120 surface feet per minute is recommended for copper, although slightly lower speeds may sometimes be necessary with wide faced tools. The .0087 inch feed should be used except for fine finish cuts, where the .0033 inch feed is best. The depth of cut for roughing can be .030 to .050 inch, and for finishing about .010 inch. Rather deep cuts at rated speed will generally be most satisfactory. On finish cuts, use a round nose tool with about 1/16 inch radius. To produce a smooth finish on copper, tools should be honed to as keen an edge as possible. Chips are tough and stringy and should be pulled away from the work—wear gloves or use a thick cloth to prevent burning your hands.

No lubricant is necessary, but it is suggested that lard oil or paraffin oil be used for threading.

Using the cut-off tool on soft copper is unusually difficult, due to the tendency of the chip to spread and jam in the groove. A method recommended by many machinists is to start a groove wider than the cut-off blade and move the cut-off tool back and forth continually as it is fed into the work, allowing the chip to clear the work without jamming. Allowance for the extra width of the groove should be made when laying out the work.

MACHINING BRASS AND COPPER ALLOYS

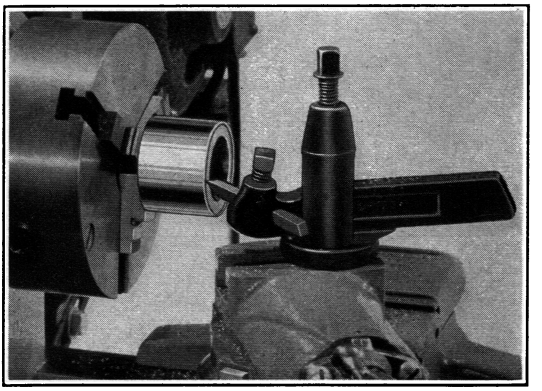

FIG. 65

A brass bushing being turned on the lathe. On many production jobs brass will be found more economical than steel, due to increased production and higher scrap value.

Free cutting brass, commercial bronze, commercial yellow brass, red brass, cast bronze, and other of the softer copper alloys are machined quite differently than steel. Because the tool has a tendency to hog into the soft metal, tool angles are required as follows:

Front Clearance	8°	Back Rake	0°
Side Clearance	10°	Side Rake	0°

A very slight side rake of not more than 5° can often be used on the free-machining grades of brass and bronze. On some of the tougher alloys, a negative side rake of 2° to 4° is sometimes used to prevent hogging. If hogging and a rough finish occurs, check the clearance angles and try a slight amount of negative rake.

On production work free-machining brass is turned at speeds as high as 600 feet per minute. For small lathe work when production is not important, these speeds are recommended:

Free Cutting Brass	300 feet per minute
Yellow Brass	200 feet per minute
Commercial Bronze	80 feet per minute
Cast Bronze	50 feet per minute

Use light cuts at rated speeds rather than deep cuts with slower speeds. For roughing, depths of cuts should be from 1/16 to 1/8 inch. The .0087 inch feed can be used for roughing, and the .0033 inch feed for finishing. Lubricants are not generally used, although paraffin oil or equivalent will assist in threading.

THE HARDER COPPER ALLOYS

Special bronzes and nickel silvers, which contain elements giving high strength, hardness and toughness, are more difficult to machine than the freer cutting brasses. Phosphor bronze and silicon bronze are in this class. Experiment with tool angles for these metals if large amounts of work are to be done. Suggested angles:

Front Clearance ..... 12°	Back Rake ..... 10°
Side Clearance ..... 10°	Side Rake ..... 0° to –2°

If hogging occurs, indicated by a rough irregular finish, reduce the rake angles.

Speeds may vary from 80 to 120 feet per minute. A feed of .0087 inch is recommended for roughing, .0033 for finishing. Take cuts of .015 inch to .125 inch in depth at rated speeds. No lubricant is necessary, although paraffin oil or equivalent will be found helpful for both turning and threading.

Some of these alloys have a small percentage of lead in their composition which improves their machinability. Rake angles of 0° should be used in turning the leaded copper alloys.

MACHINING HARD BRONZE

The alloy known commercially as hard bronze is sold under various trade names. It is used for such purposes as non-sparking wrenches and tools and has many applications where inflammable materials are handled. Its strength is comparable to tempered mild steel. Tool bits should be ground to these angles:

Front Clearance ..... 8°	Back Rake ..... 0°
Side Clearance ..... 10°	Side Rake ..... 0° to –2°

Cutting speeds for the various grades of hard bronze range between 40 and 100 feet per minute — the manufacturer's recommendations should be followed. Use the .0087 inch feed with moderately deep cuts about .030 inch in depth. No lubricant is necessary, although, in turning some of the harder grades, kerosene will be helpful.

MACHINING ALUMINUM

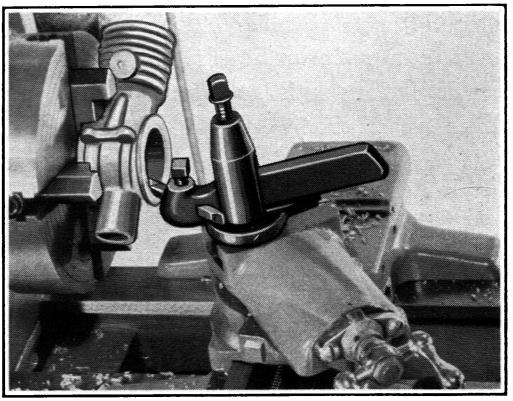

FIG. 66

Machining an alloy aluminum cylinder for a model gas engine. Engines for model airplanes and motor boats are generally made of aluminum to reduce weight.

Aluminum especially with high scrap or silicon content is difficult to machine, due to its tendency to hog and pile up in front of the tool. However, free-machining aluminum alloys have been developed and are available at most warehouses.

Two of these alloys, Alcoa 17S-T and Alcoa 11S-T3, are particularly interesting to the machinist. No. 17S-T has been on the market for some years, while No. 11S-T3 is comparatively new. Both have a tensile strength approximately equal to that of mild steel—the highest strength of any of the aluminum alloys available in rod form. Similar alloys have been marketed under various trade names, such as "Duraluminum" and are used wherever strength and lightness are desired, such as in automobiles, airplanes and dirigibles. Both Alcoa 17S-T and 11S-T3 are easily machined on the lathe with only a few special precautions.

Cast aluminum alloys have lower tensile strengths than the wrought aluminum alloys mentioned above and are ordinarily more difficult to machine. Most of the reputable foundries casting aluminum use pure alloys and turn out castings that can be machined without trouble. However, if large percentages of scrap are used or if the silicon content of the metal is allowed to become too high, there is considerable difficulty in machining.

Alcoa alloys No. 12 and No. 112 are quite easy to machine, and if castings are made from these alloys, they can be worked satisfactorily. High silicon aluminum alloys can be turned better with

special tool bits—higher speeds can be used and the cutting edge of the tool stands up longer.

TOOL ANGLES: Tool bits for turning aluminum usually have more rake on both side and front than for steel. The following angles are satisfactory for turning practically all types of aluminum alloys, both cast and wrought:

Front Clearance ..... 8°	Back Rake ..... 35°
Side Clearance ..... 12°	Side Rake ..... 15°

The edge of the tool in contact with the work should be rounded but not too bluntly. If chatter occurs, decrease the radius of the tool point. Cut-off tools for aluminum should have about 15° back rake and only 4° to 5° front clearance.

The proper cutting speed is very important in turning aluminum, and in many cases trouble can be traced to the use of too low a cutting speed. While surface speeds for turning steel vary between 75 and 150 feet per minute, aluminum is turned best at speeds from 200 feet to as high as 800 feet per minute. For general work, it is recommended that wrought aluminum alloys such as 17S-T and 11S-T3 be cut at surface speeds of 300 to 500 feet per minute, while cast aluminum should be turned between 200 and 300 feet per minute, depending upon the composition of the casting. To determine actual spindle speeds for various diameters of work refer to Figure 56.

Both Alcoa 17S-T and 11S-T3 can often be turned dry, but for best results on all aluminum some form of cutting oil should be used. Equal parts of kerosene and lard oil or equivalent make a very satisfactory cutting compound. Pure lard oil is quite satisfactory for heavy cuts and slow feeds. Alcohol and some commercial cutting compounds produce excellent finishes.

GENERAL PRECAUTIONS: Light cuts and feeds and higher speeds give best results with aluminum. The .0043 inch feed, with a depth of cut of about .020 inch, will produce excellent work, but finishing cuts should be shallower. On finishing cuts, the edge of the tool bit should be honed very sharp and smooth. Even slightly rough tool edges will leave marks on the work.

Roughing cuts will often leave a built-up "false cutting edge" of work-hardened material on the edge of the tool bit. This edge should be removed and the top of the tool bit honed before it is used for finishing cuts.

When heated, aluminum expands more than steel or brass. Care should be taken when turning between centers—the lathe should be stopped frequently to check the tightness of the work against the centers. The work should be allowed to cool before taking measurements with a caliper or micrometer. *This is important when turning aluminum.*

MACHINING MONEL METAL AND NICKEL

Due to the toughness of monel metal and nickel, the proper tool angles, speeds and feeds are especially important. A special quality of monel metal, Type R, is available and will prove fairly easy to machine. A round-nose tool with a radius of about 1/16 inch is best with the following rake and clearance angles:

Front Clearance	13°
Side Clearance	15°
Back Rake	8°
Side Rake	14°

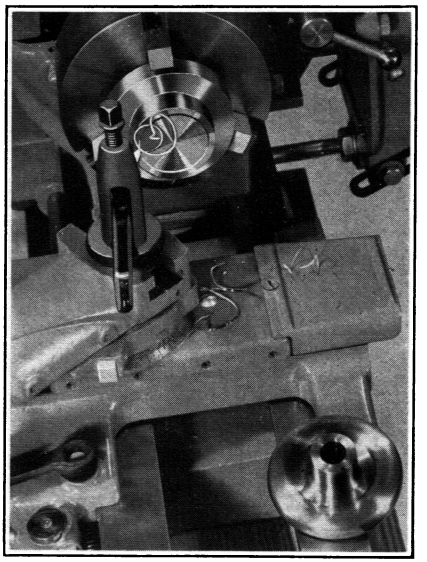

FIG. 67

Machining a monel metal hand wheel for use on a dyeing machine. A finished hand wheel is also shown. After being machined to approximate size, the hand wheel is drilled and reamed and pressed on a mandrel for finishing (see page 81).

Tool bits should be honed after grinding. A good cutting lubricant should be used for turning and drilling as well as for threading. Cutting speed should be about 100 feet per minute for cast monel metal and nickel and 120 feet per minute for rolled monel metal. Take cuts of not more than .020 to .030 inch, using the .0087 inch feed. For smooth finishing cuts use the .0043 inch feed. Deeper cuts can be taken at lower speeds but are not recommended. Tough, stringy chips are produced when machining these metals and should be kept clear of the work—use gloves or a heavy cloth in handling.

MACHINING PLASTICS

The term "plastic" applies to many types of artificially produced solids. One of the earliest plastics was celluloid — it has been followed by various other plastics, moulded and cast from such materials as phenol, urea, casein and cellulose acetate.

For machining purposes plastics can be divided into two groups: Group I includes molded Bakelite, Formica and Durez, all of which are phenol plastics moulded under heat and pressure. Group II includes all of the cast and formed plastics of various bases, sold under such trade names as Catalin, Plaskon, cast Bakelite (called Bakelite Transparent), Marblette, Joanite, Beetle, Ameroid, Pyralin, Celluloid, Tenite and Trafford.

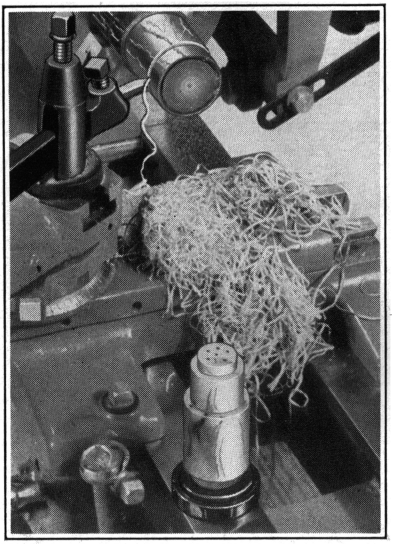

FIG. 68

Machining a salt shaker from one of the more commonly used plastics. The finished shaker is also shown. Note the stringy appearance of the chip.

MACHINING PLASTICS IN GROUP I

The machining of plastics in Group I is done best with special tool bits, and if any quantity of plastic turning is necessary, such tools will save both time and money. For a small amount of machining, high speed tool bits may be used, although it may be necessary to resharpen them several times before the job is finished. The tool should be ground to these angles:

Front Clearance ..... 8°	Back Rake ..... 0°
Side Clearance ..... 12°	Side Rake ..... 0°

Cutting speeds of 100 to 120 feet per minute should be used. No lubricant is necessary or advisable. Take rather heavy cuts, using the .0087 inch feed.

Because of the heat generated when drilling plastics, the finished hole becomes smaller than the drill. For an exact sized hole, use an oversized drill or a drill ground slightly off center. Apply

plenty of oil when drilling and back out the drill frequently to remove chips. Special drills for Bakelite are available if any quantity of drilling is done.

MACHINING PLASTICS IN GROUP II

Regulation high speed tool bits are perfectly satisfactory for the general turning of plastics in Group II. Tool bit angles:

Front Clearance ..... 10°	Back Rake ..... 0° to −5°
Side Clearance ..... 14°	Side Rake ..... 0°

For most turning the 0° angle of back rake will be satisfactory, but where there is evidence of hogging, grind a negative rake of about −5°.

The cutting speed should be around 200 feet per minute. No lubricant is necessary or advisable for turning. Light cuts of about .010 inch or less should be taken, using the .0087 inch feed, or, for a finer finish, the .0043 inch feed. If the work is being turned between centers, watch the tightness of the work against the tailstock center, as these plastics expand considerably when heated. For threading, use plenty of good cutting lubricant and reasonably high speeds.

When drilling these plastics, refer to the information listed for Group I plastics.

MACHINING FORMICA GEAR MATERIAL

Formica is a laminated plastic made of cotton duck impregnated with a phenolic resin. Tools with the following angles will be satisfactory:

Front Clearance ..... 10°	Back Rake ..... 16½°
Side Clearance ..... 15°	Side Rake ..... 10°

The best cutting speeds are between 200 and 300 feet per minute with the .0043 inch feed. Depths of cuts of about .020 inch or less should be used. No lubricant is necessary. Special tool bits are advisable if any quantity is to be turned. Grind drills to an included angle of 55°.

MACHINING MICARTA

Grind tools as for Formica gear material. High speeds around 200 to 300 feet per minute are recommended, using the .0043 inch feed, and light cuts of .010 to .020 inch. Machine dry.

MACHINING TEXTOLITE

Use tools ground as for Group II plastics. A very keen edge must be maintained and special tool bits should be used if any quantity of this material is to be machined. Cutting speed should be around 200 feet per minute when using high speed tool bits and 300 feet per minute with special tool bits. The .0043 inch feed is recommended with depths of cuts of .015 to .025 inch. All machining is done dry.

MACHINING FIBER

Fiber is an extremely hard, tough material, made in the form of sheets, rods and tubes and is used extensively due to its relatively low cost. It is not commonly termed a plastic. Tools should be ground with these angles:

Front Clearance ..... 12°	Back Rake ..... 0°
Side Clearance ..... 15°	Side Rake ..... 0°

Cutting speed should be about 80 feet per minute, using the .0087 inch feed and cuts of .010 to .025 inch. Keep the tool edge honed sharp with a rather broad nose at the point. Machine dry.

MACHINING HARD RUBBER

Tools should be ground to the following angles:

Front Clearance ..... 15°	Back Rake ..... 0°
Side Clearance ..... 20°	Side Rake ..... 0°

If the type of hard rubber used causes hogging or tearing, make the back rake negative, about −5°.

High speed tool bits are perfectly satisfactory. Speeds of about 150 feet per minute should be used when cutting dry, but care must be taken that the work does not become too warm. The .0087 inch feed is satisfactory with depths of cuts of about .010 to .020 inch.

FINISHING AND POLISHING

Figures 69 and 70 show two steps in obtaining a finely finished surface. First, the work is filed until the tool marks disappear. Never hold the file stationary while the work is revolving. Take full-cutting strokes across the work with a slow spindle speed so that the "bite" of the file can be felt. Always file dry and keep the file perfectly clean and free from oil. Filing is also a favorite method for such jobs as rounding work corners, smoothing concave cuts, finishing off handwheels and similar jobs.

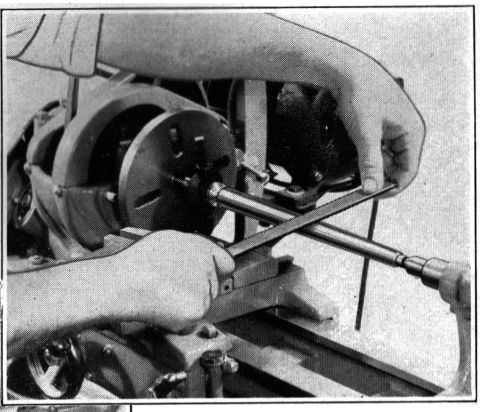

FIG. 69
Filing a taper before polishing with emery cloth.

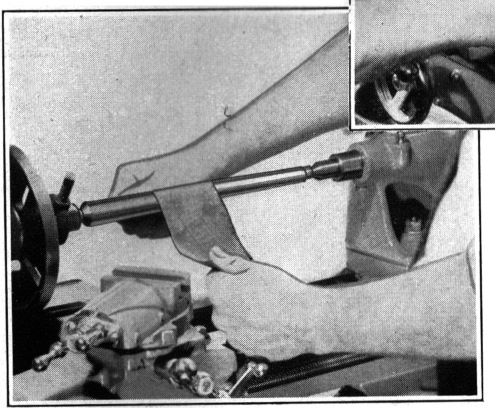

FIG. 70
Polishing steel with abrasive cloth—the emery is not held in one place but moved back and forth continually.

After filing, the work can be further polished with emery or some other abrasive cloth. See that the work is turning at a rather rapid speed. Do not hold the emery in one place—keep moving it back and forth. A few drops of oil placed on the work tends to give a better finish and eliminates scratches. Crocus cloth is also recommended for a highly polished finish.

Part 5

HOLDING THE WORK

PART 5

HOLDING THE WORK

This section describes the most common methods of holding the work in the lathe: between centers, in a chuck, on the face plate, in a collet, and on a mandrel.

BETWEEN CENTERS

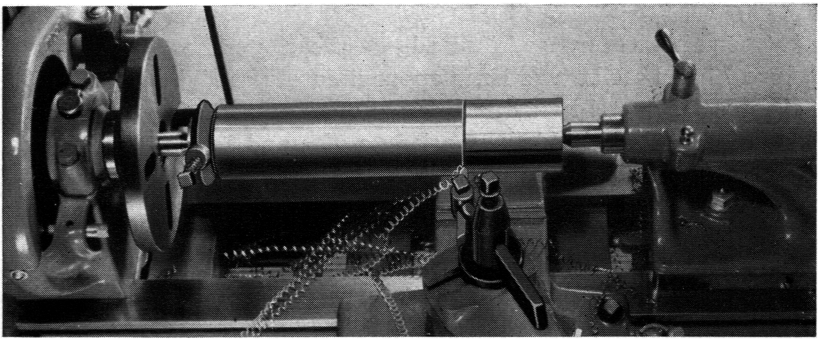

FIG. 71
Turning a piece of bar steel between centers, showing positions of the lathe dog, work and centers.

Whenever practicable, the work is held between centers. This method is usually more accurate and has the advantage of permitting removal and replacement of the work without affecting accuracy. There are two steps in mounting work between centers: locating the center points at each end of the work, and countersinking and drilling the ends to accommodate the lathe centers.

LOCATING THE CENTERS

On round work, centers are usually located with either the hermaphrodite caliper or the center head attachment for a steel scale. In the centering of square, hexagon and other regular-sided stock, lines are scribed across the ends from corner to corner. The work is then center punched at the point of intersection.

In using the hermaphrodite caliper, set the caliper to a little more than half the diameter of the work and scribe four lines as shown in Figure 72. Hold the work in a vise and center punch as accurately as possible in the center of these marks. A little chalk rubbed over the end of the work before scribing makes the marks easily seen.

FIG. 72

Using the hermaphrodite caliper to locate center points on the end of round shafting. The four lines have been scribed to mark the approximate center position.

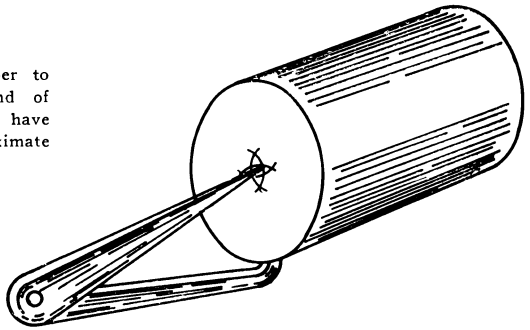

When the center head is used, set the center head as shown in Figure 73 and scribe two lines approximately at right angles. Use a sharp scriber and keep the lines as close to the edge of the scale as possible. Then hold the work in a vise and center punch at the intersection of the two lines.

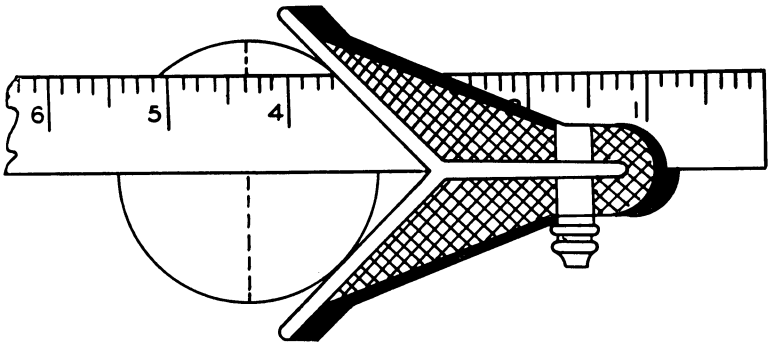

FIG. 73

Using the center head to locate work center.

If the rough stock is large enough to permit a trueing cut, the ends may be countersunk after punching. However, when the finished diameter is smaller than the stock by only a few thousandths of an inch, it is necessary to check for trueness before countersinking.

Figure 74 shows the most common method for checking trueness: Mount the work on lathe centers. Hold a piece of chalk so that it just touches the high spots of the work as it is rotated by hand. A tool bit mounted in the tool post can be used in place of chalk. Make marks close to each end, then remove the work. Hold the work in a vise and drive the two center-punched marks toward the chalk marks by striking at an angle with the center punch and then slowly bringing it back to a straight position.

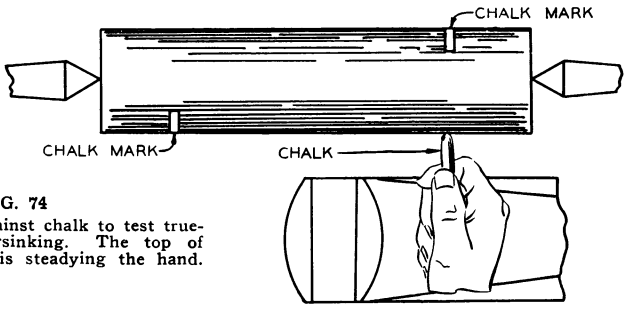

FIG. 74
Rotating work against chalk to test trueness before countersinking. The top of the compound rest is steadying the hand.

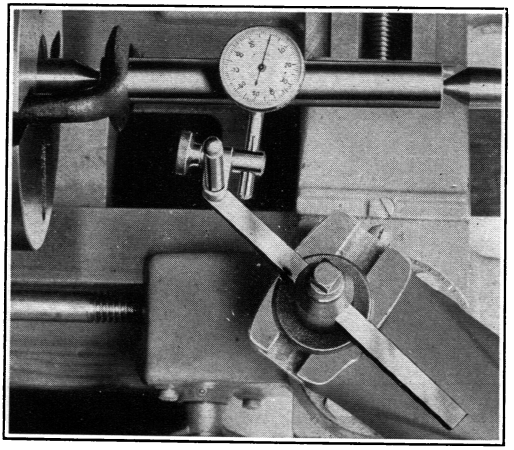

FIG. 75
Using a dial gauge to check trueness of work before countersinking.

When the center must be accurate to within one or two thousandths of an inch or when the diameter of the work is too small to permit a trueing cut, check trueness with the dial gauge before countersinking. The dial gauge is mounted in the tool post as shown in Figure 75.

COUNTERSINKING

There are three methods of countersinking the ends of the work after center punching. If a drill press is available, the work is held firmly on the table during the countersinking operation. The other two methods are illustrated in Figures 77 and 78. The size and shape of the work usually determine which method is better.

FIG. 76. 60° countersink drill for accurate centering of work to be mounted between lathe centers. The sides of the drill form an angle of 60° which exactly matches the angle of the lathe centers and provides the proper bearing surface.

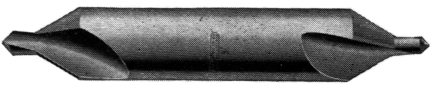

Figure 77 shows the quickest and probably the most common way to countersink centers for stock up to three inches in diameter. The left end of the work is mounted in a three-jaw universal chuck. If the work is more than ten or twelve inches long, the right end is held in position with the steady rest, relieving strain from the

chuck jaws—otherwise there is no need for supporting the right end. The center punching is tested for trueness with chalk, tool bit or dial gauge. The right end can be tapped lightly with a hammer until the work runs true. Then with the spindle turning at the proper speed, the countersinking hole is bored with the 60° countersink drill held in the tailstock with a drill chuck. Do not make the centers too large.

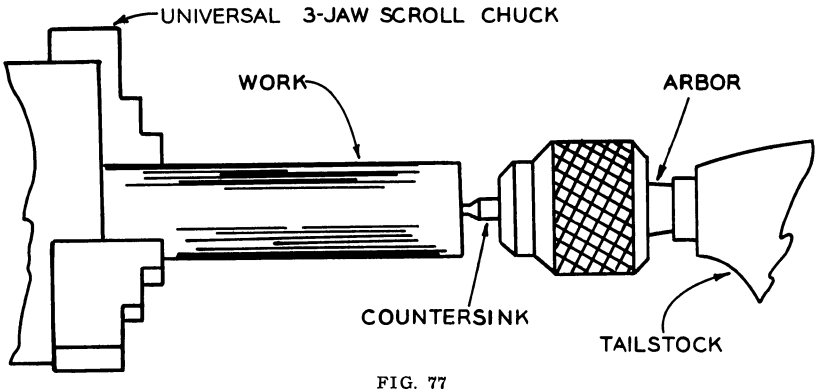

FIG. 77
The quickest way to countersink.

Another method of countersinking is illustrated in Figure 78. The countersink drill is chucked in the headstock and supports the left end of the work. The right end is mounted in the tailstock. With the spindle turning at 685 or 805 R.P.M., the work is fed to the countersink drill from the tailstock and kept from turning with the left hand. Do not force the drilling or feed too fast—the advance can be felt when turning the tailstock hand wheel. If the countersink is forced and breaks off, the simplest way to remove the head is to cut about one-half inch from the end of the stock. If the work cannot be shortened, heat the piece of countersink, cool slowly by covering with ashes or annealing compound, and drill out.

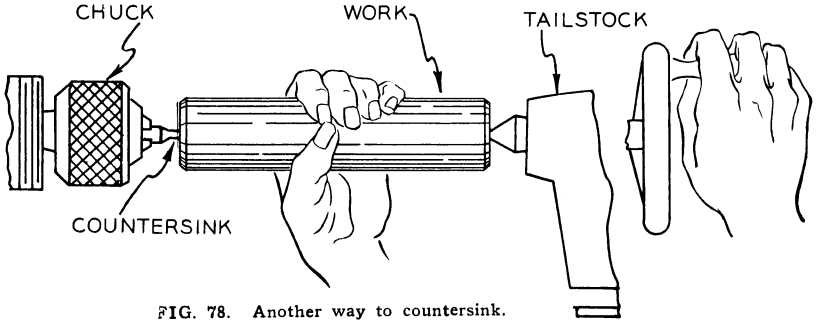

FIG. 78. Another way to countersink.

MOUNTING WORK BETWEEN CENTERS

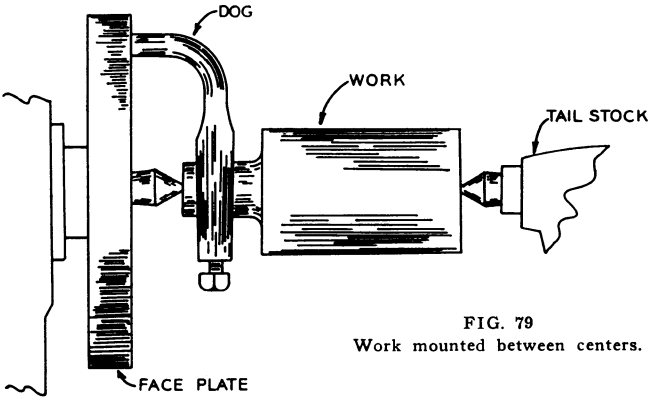

FIG. 79
Work mounted between centers.

Figure 79 shows how work is mounted between centers after the ends have been countersunk. The set of four dogs in Figure 80 handles diameters up to 1½ inches. Care must be taken in the selection of the dog. The "tail" or bent portion must fit into the face plate slot without resting on the face plate. Figure 81 shows the result of making this mistake. The dog tail rests on the face plate at A and the headstock center does not "seat" properly in the countersunk hole at B.

FIG. 80
Lathe dogs for driving work up to 1½ inches in diameter.

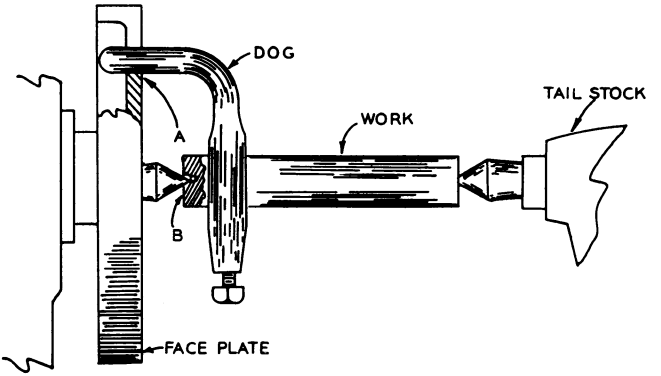

FIG. 81
Result of choosing the wrong size dog.

Work over 1½ inches in diameter can be held in the clamp type dog (Fig. 83A) or adapted to the 1½ inch dog as shown in Figure 82. The latter method requires light cuts, a rather loose tailstock center and is not recommended as standard practice. The two sizes of clamp type dogs hold stock up to 3½ inches in size and have several other advantages. They drive work of many different shapes (Fig. 83B) and can be applied if necessary without removing work already mounted between centers.

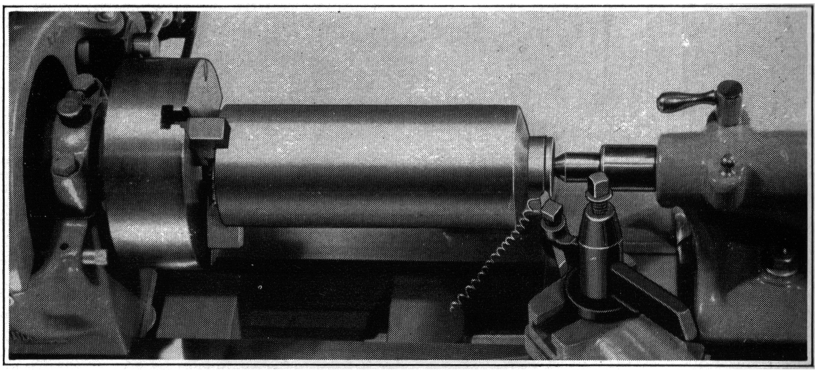

FIG. 82
Turning down a shoulder to fit the 1½" dog. This method of adapting large work to a dog is not advisable for general turning.

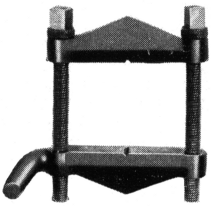

THE CLAMP TYPE DOG

FIG. 83A
(Left) Clamp Type Dog.

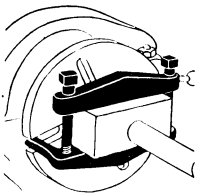

FIG. 83B
Holding rectangular work in the clamp-type dog.

THE FOUR JAW INDEPENDENT CHUCK

Much of the work to be turned or threaded on the lathe is not of a size or shape which permits mounting between centers. In such cases it is customary to mount the work on a face plate or hold it in a chuck, a device with jaws which grip the work rigidly while it is being machined.

If only one chuck is to be purchased, it should be the four-jaw independent chuck shown in Figure 84. It is easily the most versatile type of chuck. The four jaws are adjusted separately and are reversible so that work of any shape can be clamped from the inside or the outside. Some independent chucks are threaded

to fit directly on the spindle nose, others are bolted to an adapter plate which fits the spindle.

Mounting work in the four-jaw chuck is largely a matter of centering. Determine the portion of the rough work that is to run true, then clamp the work as closely centered as possible, using as a guide the concentric rings on the face of the chuck. Test for trueness, marking the high spots with chalk rested against the tool post or a tool bit mounted in the tool post (see Fig. 85). The chuck jaws should be adjusted until the chalk or tool bit contacts the entire circumference of the work.

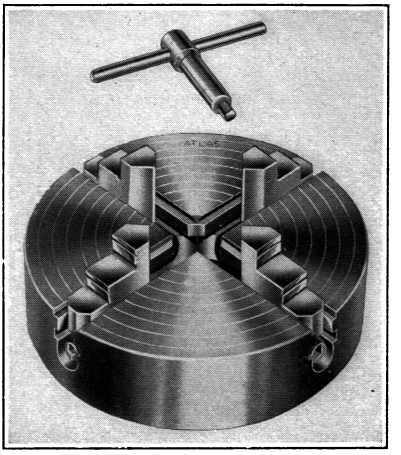

FIG. 84

The four-jaw independent chuck. The concentric rings on the face aid in adjusting the position of the work.

If especially accurate centering is desired, the trueness of the work should be checked with the tailstock center by means of an instrument called a center tester (see Fig. 86).

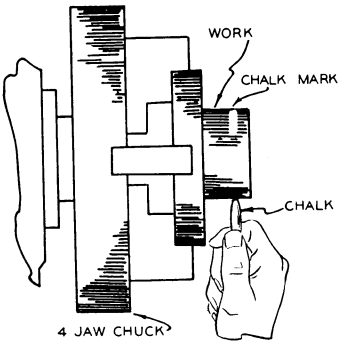

FIG. 85

(Right) Testing for trueness.

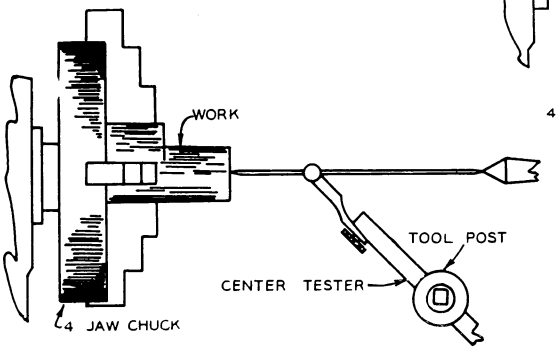

FIG. 86

Using the center tester.

THE THREE-JAW UNIVERSAL SCROLL CHUCK

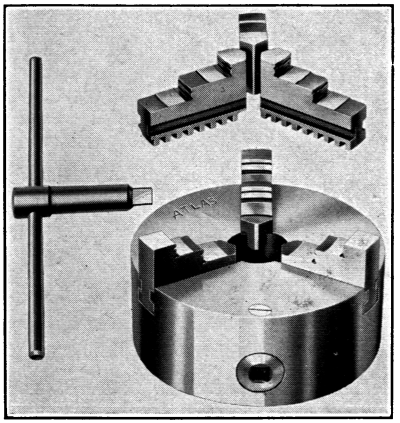

FIG. 87
The three-jaw universal scroll chuck.

The three jaws of the universal scroll chuck are self centering and adjusted by turning one screw. This construction saves time in the centering of round or hexagon work, but means that the universal chuck cannot be used for square or irregular shapes. 3/4 inch stock can be fed through the headstock spindle and held in the universal chuck for turning or drilling.

Careful machining of the scroll controlling the jaws makes most universal chucks accurate to within .003 inch. For extremely accurate work, check for trueness with chalk and place shims over one of the jaws until the work runs true. To insure accuracy, the piece being machined should never be removed or reversed until all operations have been completed.

The teeth of the jaws are cut in a circular shape to mesh with the scroll threads. Consequently, the universal chuck jaws cannot be reversed. An extra set of jaws, carefully fitted to the chuck, is furnished so that large diameters can be held from the inside or outside.

To change universal chuck jaws, first remove jaws from slots by turning wrench. If jaws stick tap lightly with a piece of wood or a brass hammer. Note that each jaw and jaw slot is marked "1," "2," or "3." Place new jaws opposite slots with the same number. See that jaws, jaw slots, and scroll are free from dirt. Turn scroll until the outside start of the scroll thread is just ready to pass the No. 1 jaw slot. Slide No. 1 jaw as far as possible into No. 1 slot. Turn scroll until jaw is engaged. Advance scroll and repeat for Nos. 2 and 3 jaws. Scroll thread must engage the first tooth in the No. 1, No. 2 and No. 3 jaws in order, and each jaw must be in its own slot.

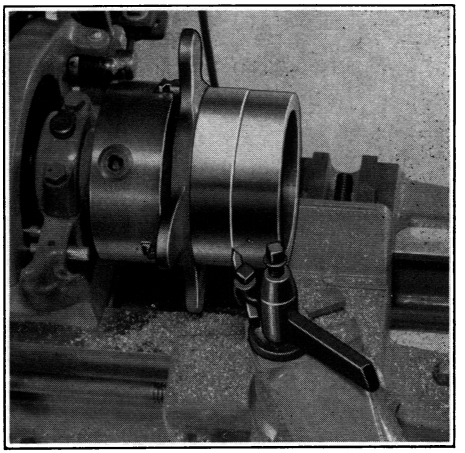

FIG. 88
Turning a large brass hydrant cap held in the universal chuck. Note that jaws are gripping the inside of the work.

THE JACOBS HEADSTOCK CHUCK

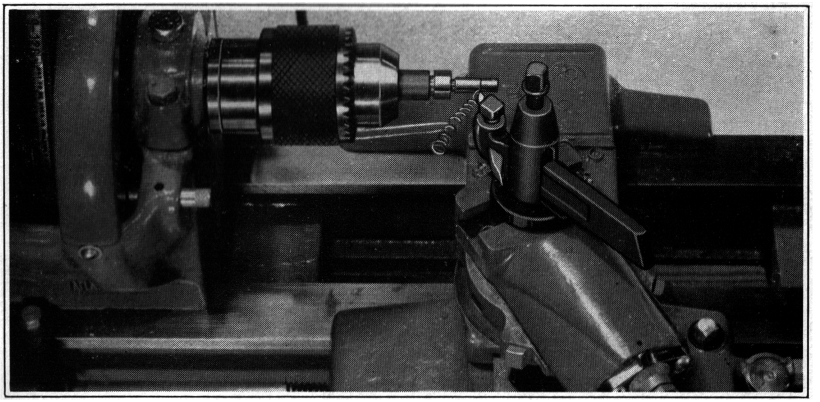

FIG. 89
Turning a small screw held in the headstock chuck.

The Jacobs headstock chuck is a most versatile chuck for holding small work in the lathe. Its accuracy is surpassed only by precision-made collets. The machinist handling any quantity of small work usually considers the headstock chuck an essential part of his equipment.

The headstock chuck is furnished in two sizes: capacities, 1/8 to 5/8 inch and 1/4 to 3/4 inch. Both are key-type chucks with a hollow construction so that work can be fed through the headstock spindle. They are threaded to fit the spindle nose of the Atlas Lathe. The smaller size can also be used as a drill chuck, the inner section being tapered to fit an arbor adapter for mounting in the tailstock.

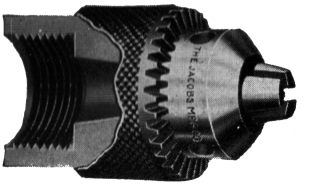

FIG. 90
The Jacobs headstock chuck showing internal taper for tailstock mounting.

When mounting work in the headstock chuck, take special care to clean between the jaws as well as the jaw surfaces. Never tighten the jaws until the work has been centered—keep twisting the work as the jaws are tightened.

REMOVING CHUCKS FROM THE LATHE SPINDLE

Almost every machinist has a favorite way to remove lathe chucks. The following method, illustrated in Figure 91, is simple and does not harm the chuck:

Turn the chuck until wrench hole is at the top. Lock the spindle in position by engaging the back gears without pulling out

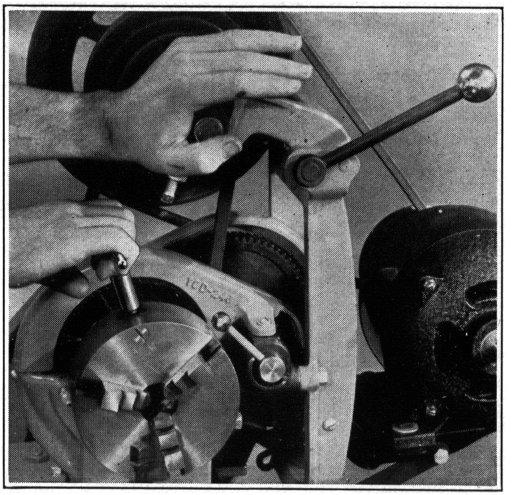

FIG. 91
A proper method for removing a chuck.

the lock pin on the face of the front spindle back gear. Put the chuck wrench in its hole and pull as shown in Figure 91. If necessary, tap the jaws with a piece of wood or a brass hammer. Do not remove the chuck carelessly. You may damage the spindle or chuck threads or drop the chuck on the bed ways.

GENERAL RULES FOR USING CHUCKS

Keep the chuck clean and do not oil excessively—a light film on all working parts is ample. Before mounting work, clean the threads in both the chuck and the lathe spindle with a piece of bent wire. Clean the face of the shoulder on the spindle nose and the back face of the chuck. Put a few drops of oil on spindle nose.

Mount the chuck carefully and not too tight, first removing the center and sleeve from the spindle. When the chuck is about 1/32 inch from the shoulder, finish with one more turning motion. The soft thud indicates a good firm seating against the shoulder. Running a chuck suddenly against the shoulder strains the spindle and makes removal difficult.

Be careful when tightening work in the chuck jaws. Too much pressure on the jaws will affect the accuracy of the chuck and may spring the work if a light piece is being turned. Try to have the jaws tighten around the more solid parts of the work. Always use the wrench which comes with the chuck. When chucking work in the universal or headstock chuck, turn the work as the jaws are tightened—an accurate "form fit" will result.

Small diameter work should not project from the chuck jaws

more than four or five times its diameter—cuts should be short and light. Heavy cutting pressures will often cause small work to spring out and "ride the tool." In some instances, extra long work can be supported in the tailstock center.

Do not force a chuck to carry work larger than the diameter of the chuck body. Repeated overloading may damage the chuck.

If the jaws stick, tap lightly with a piece of wood or a brass hammer. "Sticky" jaws indicate that the chuck should be taken apart for a thorough cleaning. An old toothbrush makes an excellent chuck cleaner. Wash and brush chuck parts in a pan of kerosene. When reassembling, do not apply too much oil. Oil collects dust and chips which sooner or later clog the chuck mechanism.

Chuck jaws are carefully fitted to the chuck at the factory and are not interchangeable. When new jaws are necessary, return the complete chuck to the manufacturer. Inspect the chuck regularly to see that all parts are in good working order.

Keep the chuck protected when not in use. Dirt, dust, chips and falling tools can cause much damage.

THE FACE PLATE

Many types of lathe work which cannot be machined on centers or in a chuck are fastened to a face plate with bolts, studs or clamps. Some of the most accurate tool and die operations are handled in this way. Face plate work also includes the turning of large, flat or irregular shaped pieces such as jigs. The 8½ inch face plate shown in Figure 92 is recommended for all types of face plate turning or boring.

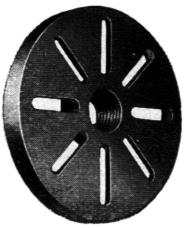

FIG. 92
8½ inch Face Plate

The face plate should be mounted carefully in the same manner as a chuck (see page 78). For ordinary turning the work is simply bolted or clamped directly to the face plate. When maximum accuracy is desired, a light trueing cut is

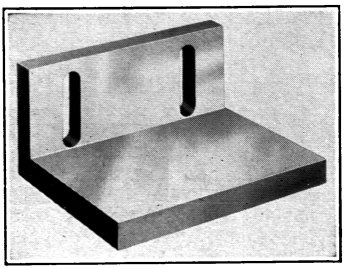

FIG. 93
Angle Plate

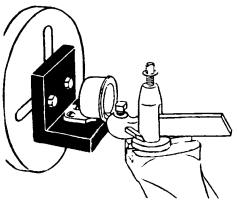

FIG. 94
Using the Angle Plate

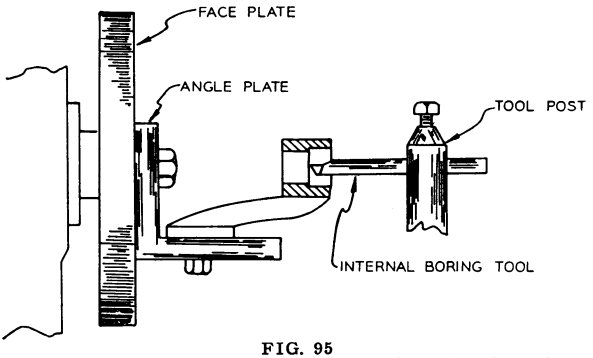

FIG. 95
How the angle plate centers a portion of an irregular piece of work.

first taken across the face of the face plate. The face plate can be removed by tapping the slot at the outside edge with a piece of wood or a brass hammer.

The angle plate shown in Figure 93 is bolted to any point on the face plate for machining irregular shapes and for off-center drilling and boring. Figures 94 and 95 show two typical jobs.

Note: When heavy pieces are mounted off center, bolt a counter-balance of equal weight on the opposite edge of the face plate. The counter-balance protects lathe accuracy by equalizing pressure on the bearings and reduces excessive vibration caused by out-of-balance turning.

DRAW-IN COLLET ATTACHMENT

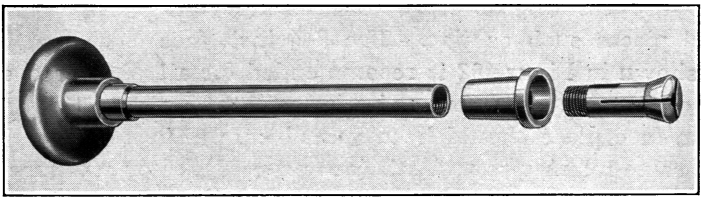

FIG. 96
Draw-in collet chuck attachment showing units in order of their assembly into the lathe headstock: draw-in spindle, tapered closing sleeve, and split holding collet.

Whenever extreme accuracy is required on small diameters, the draw-in collet attachment is the logical method of chucking. When equipped with the collet assembly and the various size collets, an Atlas Lathe handles the most exacting work in tool rooms and tool and die shops. Some typical collet work: precision tools, instruments, gauges and small production parts.

The collet attachment, as shown in Figure 96, includes a hollow

draw-in spindle which extends through the lathe headstock spindle, a tapered holding sleeve and the split holding collets. The collets are released or tightened on the work by turning the hand wheel (see Fig. 97). Work can be fed through the lathe headstock spindle. The individual collets are furnished in all 32nds between 1/32 and ½ inch. Special sizes and shapes including metric diameters are also available.

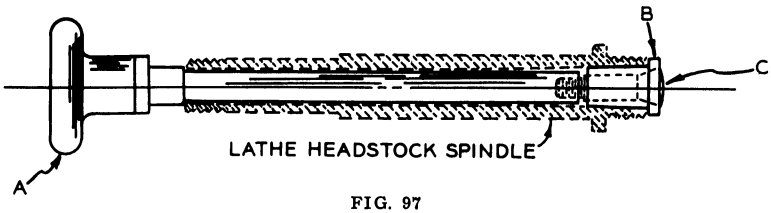

FIG. 97
Cross section showing draw-in collet assembly in lathe headstock. Turning handle A pulls collet C into sleeve B, tightening collet on work.

There are two important rules for the use of the draw-in collet chuck attachment—first, absolute cleanliness and, second, selection of the proper size collet. The collets, tapered sleeve, and the inside of the spindle nose *must* be wiped clean and dry. A collet must never be used to hold work which is more than .005 inch larger or smaller than the rated diameter of the collet. A collet attachment is the most accurate type of precision chucking and must be treated with greatest care.

MOUNTING WORK ON THE MANDREL OR ARBOR

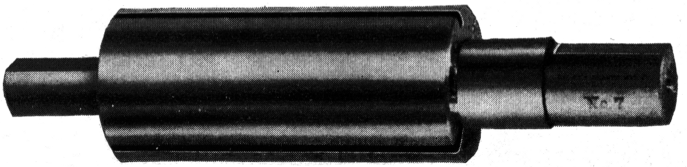

FIG. 98
Expanding mandrel.

Figure 98 shows a commercial type of expanding mandrel or arbor designed to provide work centers for facing or turning the outside diameter of work that is nearly finished or difficult to mount in a chuck. The machining of pulleys and gears is a typical mandrel job.

The mandrel consists of the ground and hardened body, tapered through its entire length, and a cast iron expansion sleeve with an internal taper to fit the body. Forcing the sleeve on the mandrel causes it to expand and hold the work firmly in position.

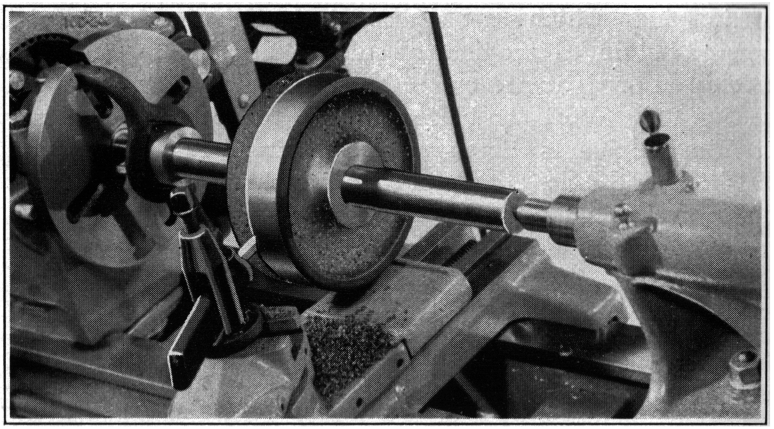

FIG. 99
Turning a cast iron pulley on a mandrel.

A mandrel, such as the one used in Figure 99, is often made on the lathe for any special piece of work. These mandrels are turned from round bar machine steel stock and the ends case-hardened if possible. Cast iron, with hardened tool steel plugs for the ends, is often used in making a mandrel for large work. The mandrel should be tapered about .006 or .008 inch per foot and polished or ground. When finished, the mandrel diameter should be a force fit for the hole in the work and the tailstock end should be .003 or .004 inch smaller. It is recommended that the mandrel be turned undersized at both ends for about ¾ inch to prevent damage.

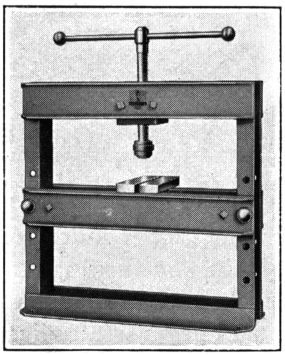

FIG. 100
The Atlas P-10, a new type of arbor press often used for mandrel work. This press handles extra large work dimensions and is capable of exerting 8 to 10 tons pressure.

A mandrel is a precision tool for accurate work and must be handled with care. The ends are centered and countersunk exactly like other work. To make removal easier, put a drop or two of oil on the portion of the mandrel which will grip the work. Never drive a mandrel with a steel hammer without protecting the end. The best tool for forcing a mandrel in or out of the work is an arbor press, or mandrel press. One type of arbor press is shown in Figure 100. Be sure the work is started perfectly straight and on the entering end of the mandrel. Do not allow the tailstock center to become too hot during the machining operation.

Part 6

DRILLING AND BORING

PART 6

DRILLING AND BORING

DRILLING

Lathe drilling can be handled in two ways. Figure 101 shows the work revolving while the drill is held stationary in the tailstock. This method results in a straighter hole and insures greater accuracy than any other method. The second method of drilling is shown in Figures 114 and 115—the work is held rigid while the drill turns in the headstock. The shop with considerable drilling, reaming and tapping will find a drill press a profitable investment, because the lathe requires special attachments for production drilling.

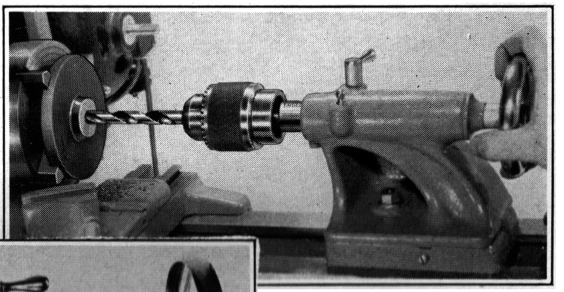

FIG. 101
Drilling with the work revolving in the headstock. This type of setup insures maximum accuracy. Note use of graduated tailstock ram to indicate depth.

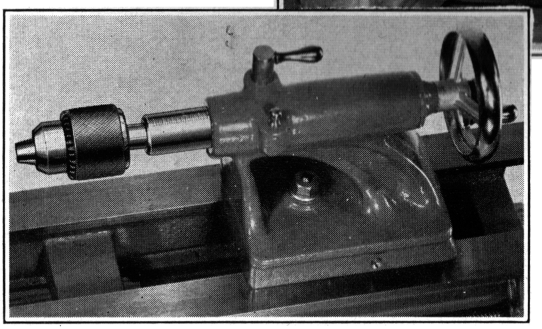

FIG. 102
Jacobs drill chuck held in the tailstock on an arbor. These chucks hold work up to ½ inch in diameter and can be used in headstock or tailstock. Follow general rules for using chucks—Part 5.

TWIST DRILLS

After the drill point is dulled for the first time, its effectiveness depends entirely upon how it is reground. For clean, accurate drilling, the operator must know how to resharpen the drill properly. Figures 103 and 104 give the usual shop terms used in drill grinding. The cone-shaped surface at the end of the drill is called the "point," and the edge at the extreme tip end is the "dead center."

THE TWIST DRILL

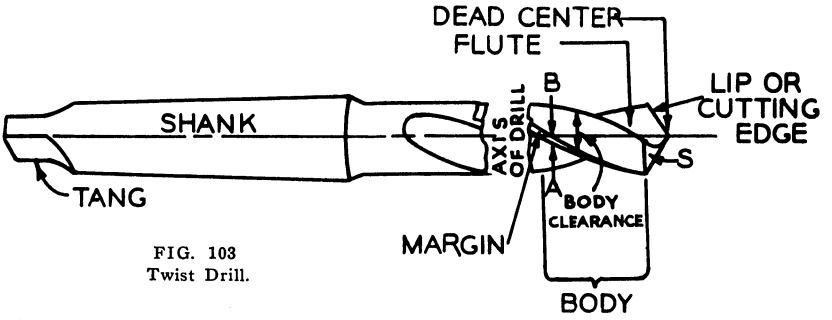

FIG. 103
Twist Drill.

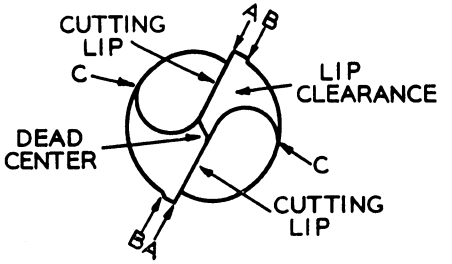

FIG. 104
Point of Twist Drill—End View.

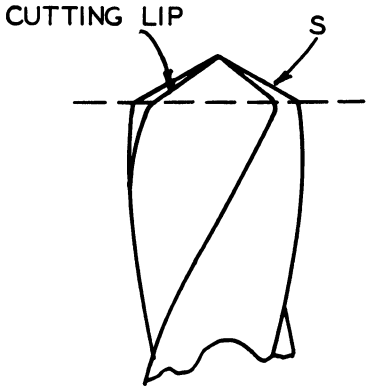

FIG. 105A
Drill without lip clearance. The cutting lip and heel, S, are in the same plane.

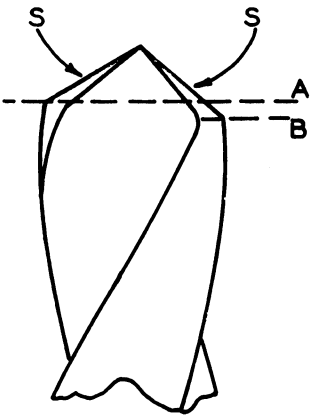

FIG. 105B
Drill with proper lip clearance. Heel line, B, is lower than cutting lip line, A. Distance between A and B measures amount of lip clearance.

Basically, a drill cuts metal exactly like a lathe tool. In order to penetrate the work, the cutting edge must have the correct cutting angle and "lip clearance" at the center of the drill (Fig. 104). Figure 105B shows how the "heel," the part directly back of the cutting edge, must be ground away. The word "heel," when used in this sense, includes the entire surface back of the cutting edge, not the circumference only.

FIG. 106. THE PROPERLY GROUND DRILL

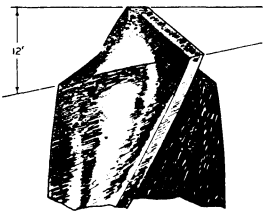

FIG. 106A
Drill point showing proper lip clearance angles at the circumference of the drill.

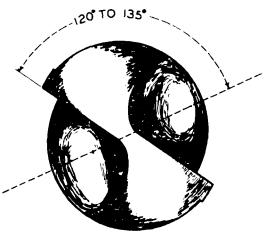

FIG. 106B
End view of drill point showing proper angle between point and lip.

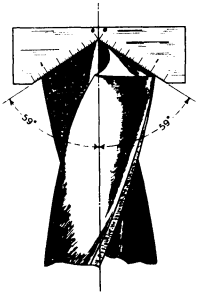

FIG. 106C
Drill point with lips ground identically. Lips are of equal length, clearance and angle.

Two rules are especially important when grinding drill points. First, the lip clearance angle (Fig. 106A) should be between 12 and 15 degrees. Second, the two cutting edges must be of equal length and angle. Figure 107 (below) shows the unsatisfactory results of disregarding these two rules. In Figures 106A, B and C, the properly ground drill point is shown—note lip clearance, angle between point and lip, and the identical lips. Refer to these drawings while the drill is being ground—they will aid in grinding drills which will cut true-sized holes with a minimum of drill wear. The angle of 59° given in Figure 106C is satisfactory for the general drilling of steel, iron and brass—larger angles are used frequently in production work and on softer metals. Both lip angle and lip length should be checked with a drill gauge (Fig. 108).

FIG. 107

Common mistakes of drill grinding. Note that in each case the resulting hole must be oversize. (Left) Lips of unequal angle and unequal length. Drill point actually travels AROUND the center of the hole. (Center) Lips of unequal angle. The right lip is doing all the work. (Right) Lips of equal angle, but unequal length, causing excessive wear on right lip.

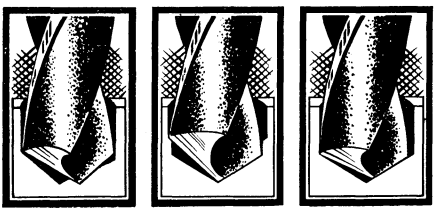

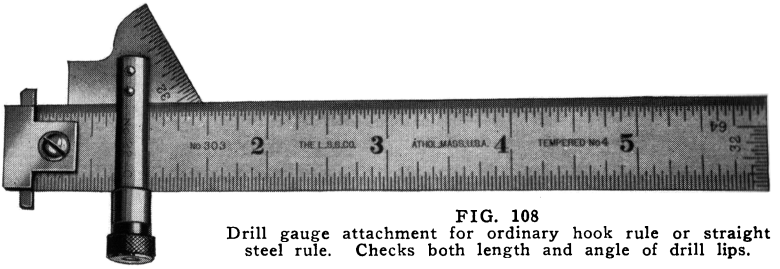

FIG. 108
Drill gauge attachment for ordinary hook rule or straight steel rule. Checks both length and angle of drill lips.

DRILL GRINDING ATTACHMENT

Shop men agree that it is difficult to grind a small drill accurately by hand—very often a good portion of the drill is ground away without giving service. The attachment shown in Figure 109 has proved to be a great help in overcoming these difficulties. It is moderately priced, simple in operation and can be attached quickly to any grinder. Any drill between 3/32 and 1/2 inch can

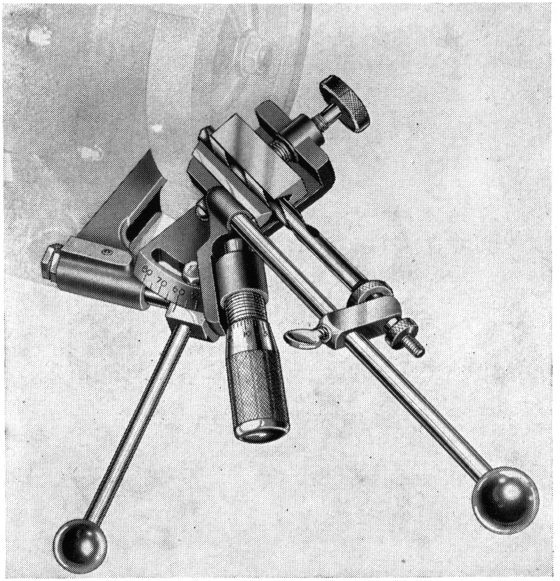

FIG. 109
Drilling Grinding Attachment.

be centered automatically in the novel chuck and V-block. Lip angle is controlled by adjusting the swivel base with the ball handle at the left. The design of this attachment allows the drill to be turned in an exact half circle and accurately rechucked after one lip has been ground. In this way, the two lips of the drill are always ground identically.

DRILLING SPEEDS

When high speed drills are used, drilling speeds in surface feet per minute for the various metals are the same as the speeds for general turning given in Part 4. The upper portion of the Table of Cutting Speeds, page 49, will assist in the selection of the proper drilling speed. The figures in the column below "Diameter of Work" can be considered as drill sizes. Belt positions are determined by locating the proper spindle speed in Figure 56 and then referring to Figure 55, page 47. The speed should be reduced one-half with carbon drills.

Make sure that the drill runs true when starting—it may be necessary to countersink the work (see page 71). Small drills should be fed into the work carefully since they are designed to be run at very high speeds. Avoid too high a speed, especially with the larger drills—Figure 110 shows how an excessive speed wears off drill corners. Too high a speed also draws the temper of the drill and may even burn or break the drill tip.

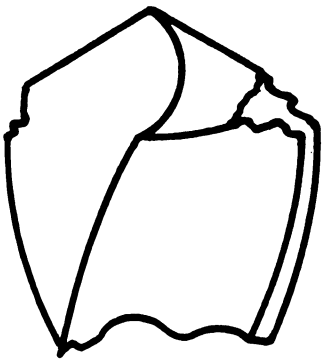

FIG. 110
Drill with edges burned by excessive heat from high speeds or drilling hard material.

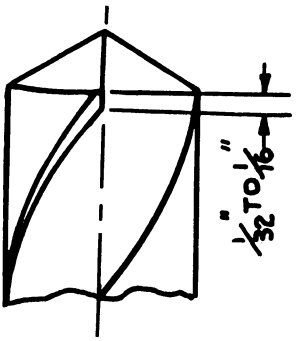

FIG. 111
Drill point for drilling brass.

NOTE: When drilling brass, aluminum, lead and other soft materials which cause the tool to "hog in," reduce the rake angle of the cutting edge by grinding as shown at the left. This reduced rake angle is also desirable when drilling very hard materials because it lessens the strain on the drill. This change makes drilling easier and smoother and results in a more accurate drilled hole.

LUBRICATION

A cutting compound is essential when drilling practically any metal. The following compounds will give best results:

Hard, tough steels	Turpentine or kerosene
Softer steels	Lard oil or equivalent
Aluminum and other soft alloys	Kerosene
Brass	Drill dry or use paraffin oil
Die castings	Drill dry or use kerosene
Cast iron	Drill dry

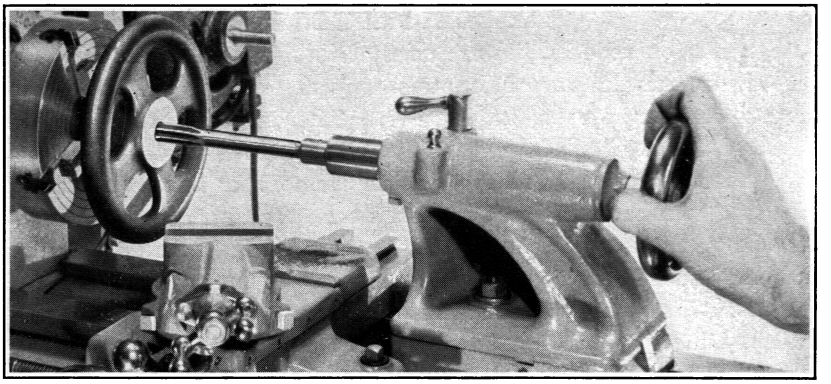

FIG. 112. Reaming a cast iron handwheel.

REAMING

When a hole must be accurate to within .002 inch or less, it is first drilled a few thousandths of an inch undersize and then hand-reamed or reamed on the lathe to the finish-diameter. Figure 112 shows a typical reaming job on the lathe. For best results, follow the same rules in reaming as in drilling and general turning. Use slow speeds, feed in evenly and be sure there are no burrs on the reamer teeth. The type of reamer shown in Figure 113 is generally used in the lathe.

FIG. 113 Reamer with Morse Taper shank for tailstock.

A reaming allowance between .010 and 1/64 inch is usually sufficient for machine-reaming holes with diameters of 1 inch or less—an allowance of 1/64 to 1/32 inch is recommended for machine-reaming holes between 1 and 2 inches in diameter. .003 to .005 inch is usually allowed for hand reaming operations.

CROTCH CENTER AND DRILL PAD

The crotch center and drill pad are two important attachments recommended for drilling work that cannot be chucked in the lathe. Both are mounted in the tailstock ram as shown in Figures 114 and 115.

The drill pad serves as a table for flat or square work and is especially valuable for drilling large holes when a drill press is not available. The crotch center automatically centers round work for cross drilling. The work is held in the left hand and advanced against the drill by turning the tailstock handwheel. The left

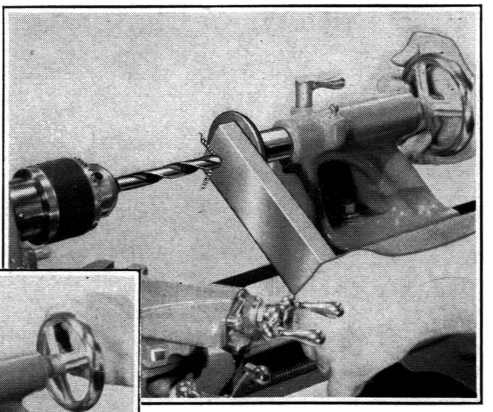

FIG. 114
Using the drill pad to support flat work while drilling a large hole.

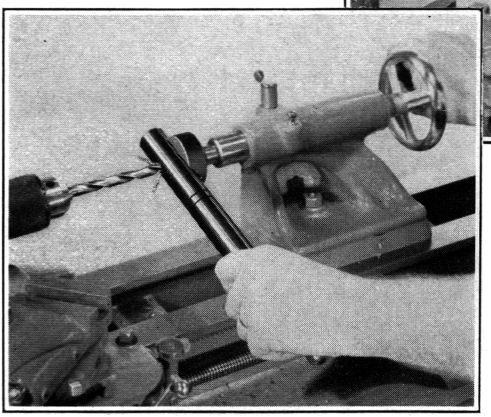

FIG. 115
Cross drilling a round shaft centered in the v-slot of the crotch center.

hand and work can be rested on a piece of wood to protect the bed way as shown in Figure 114 above.

DRILL SETS

Every shop requires an assortment of the more commonly used drills. The sizes necessary depend upon the amount and character of the operations ordinarily performed. There is a marked trend toward the high speed drill in preference to the carbon drill. The drill set in Figure 116 includes high speed or carbon drills between 1/16 and ½ inch by 64ths and is adequate

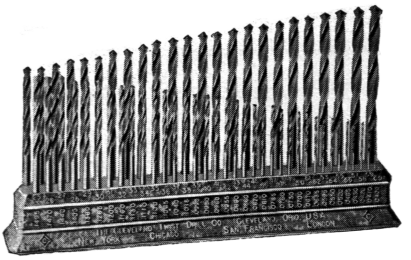

FIG. 116. Drill set including metal carrying case and stand for 29 drills.

for most small shops. The metal stand has a hole for each drill with the drill size and its decimal equivalent clearly marked. The drills can also be purchased separately.

The tables in Part 10 of this Manual give the decimal equivalents of the numbered and lettered drills and the proper drills for use with various sizes of taps. Drills in metric sizes are also available.

BORING OPERATIONS

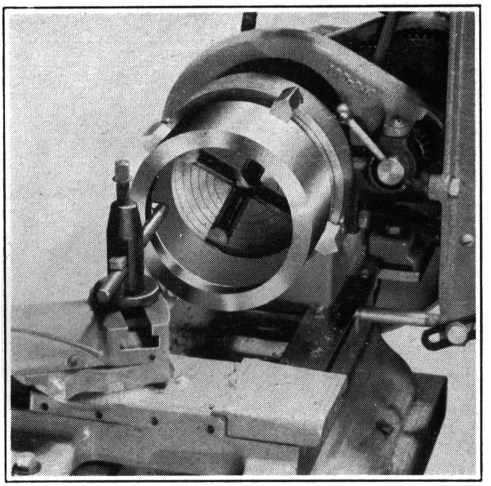

FIG. 117
Boring the inside of a large steel bushing. Note high-speed boring tool mounted directly in tool post for maximum rigidity.

Boring operations require only slightly different tools and methods than those for external turning. The big problem is that of tool rigidity—most internal cutting tools project considerably from their support. Figure 117 shows a typical boring operation.

There are several types of boring tools and mounting methods. The tools shown in Figure 119 are mounted directly in the tool post. The solid one-piece construction adds to rigidity by eliminating the extra joint which would result if the tool were held in a separate holder. This set includes a small v-block, two blocks for height spacing, and two 3/8-inch heavy-duty external tools for use directly in the tool post.

TOOL SHAPES FOR BORING

Although boring tool angles in relation to the work are somewhat different than those of an external tool, the terms in Figures 118A and 118B are fairly standard and will aid in proper tool grinding.

BORING TOOLS

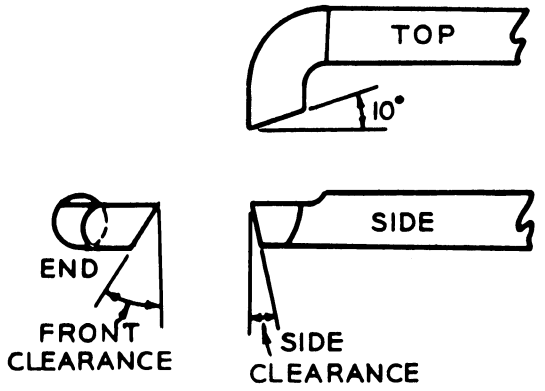

FIG. 118A

This drawing shows construction and angles of the boring tools shown in Figure 119 below. These angles make this type of tool extremely practical for all-around boring.

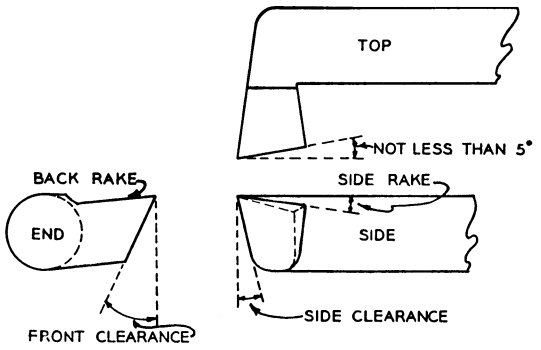

FIG. 118B

The boring tool angles shown in Figure 118A often resemble angles like these after continued grinding. New angles, such as the rake angles shown here, may be ground as desired for special jobs.

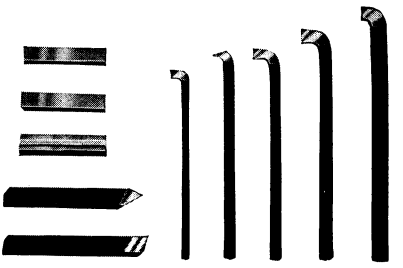

FIG. 119

Set of tools for use directly in the tool post. This set includes four boring tools, one inside threading tool, two spacers, v-block, ⅜ inch high-speed threading tool, and ⅜ inch high-speed turning tool.

TOOL SHAPES FOR BORING (Continued)

Front clearance must be increased in order to prevent the heel from rubbing on the surface of the cut. The exact amount of front clearance depends upon the size of the hole being bored. Figure 120 shows how a front clearance angle can be too small for one hole but satisfactory for a larger hole.

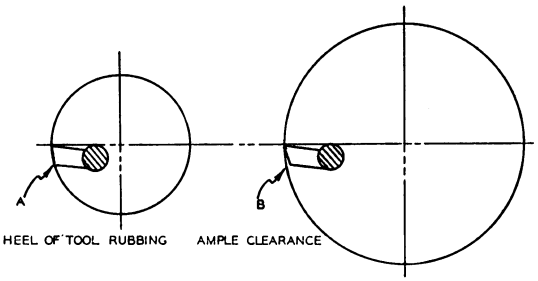

FIG. 120
This drawing shows how a certain angle of front clearance may be too small for one hole but satisfactory for a larger hole. At "A" the heel of the tool is rubbing. At "B" in the larger hole there is ample clearance.

Boring also requires smaller rake angles, and finer cuts and feeds, due to two reasons: (1) the strength of the tool edge has been reduced by the larger clearance and (2) the boring tool has a tendency to twist and "spring." The tools shown in Figures 118A and 118B are excellent for most boring operations.

BORING TOOL ANGLES

Front Clearance: Depends upon size of hole. Never less than 10°; up to 20° for very small holes.
Side Clearance: Same as for external tools.
Back and Side Rake: About half of external angles—in some cases, less than half.

SETTING THE BORING TOOL

With the round tool shank parallel to the lathe center line, set the boring tool into the work with the shank below the center line. Then by putting the cutting edge on exact center, the correct amount of back rake is provided. The general rules for the use of external tools apply to boring tools, except that rake angles depend a great deal on how the boring tool is set in the holder. For maximum rigidity, choose the largest possible boring tool.

BORING HINTS

When enlarging an out-of-round hole, take several small cuts rather than one heavy cut. This gradual process avoids spring in the tool—the final finish cut should be continuous.

After the last finish cut it is common practice to shift the reversing lever at the end of the forward cut and take a last fine shaving cut with the tool coming out of the work. This last cut is taken without resetting or disturbing the tool and avoids a slightly undersized hole which might otherwise result from tool spring.

Use the .0033 or .0043 inch feed and take shallow cuts.

BORING WITH THE WORK HELD STATIONARY

Figure 121 shows a method of taking long or heavy boring cuts. The work is clamped rigidly in a milling attachment on the carriage, and a boring tool bit is set into an arbor mounted between centers. The tool bit is reset after each cut. Larger rake angles and heavier feeds and cuts may be used, since the tool has less spring.

Boring bars of this type can be purchased or made in the shop. Figure 122 shows construction details of a bar which can be made quickly and simply.

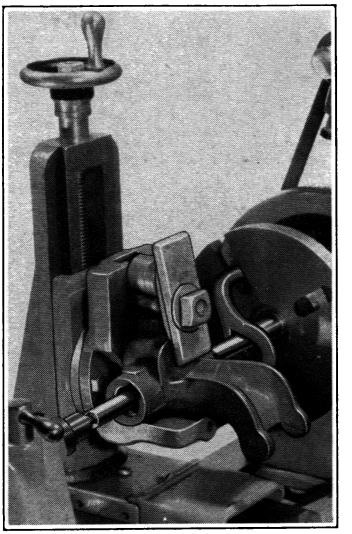

FIG. 121

Boring a small grinder spindle bearing housing held in the clamping plate. This plate is described on page 168.

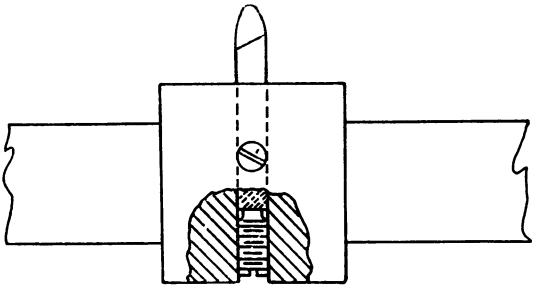

FIG. 122

A boring bar that can be made easily in the small shop. One set screw feeds the tool bit into the work after each cut—the other locks the tool bit in place.

Part 7

THREAD CUTTING

PART 7

THREAD CUTTING

No phase of lathe operation is more interesting or profitable than the cutting of screws and threads; and no operation requires more care and study. The thread cutting range of the Atlas is practically unlimited—a few sample threads are shown in Figure 123. This section deals with the two classes of thread cutting problems: (1) those connected with the change gear train and its proper set-up for cutting the various sizes of threads, and (2) the actual cutting of the many thread forms.

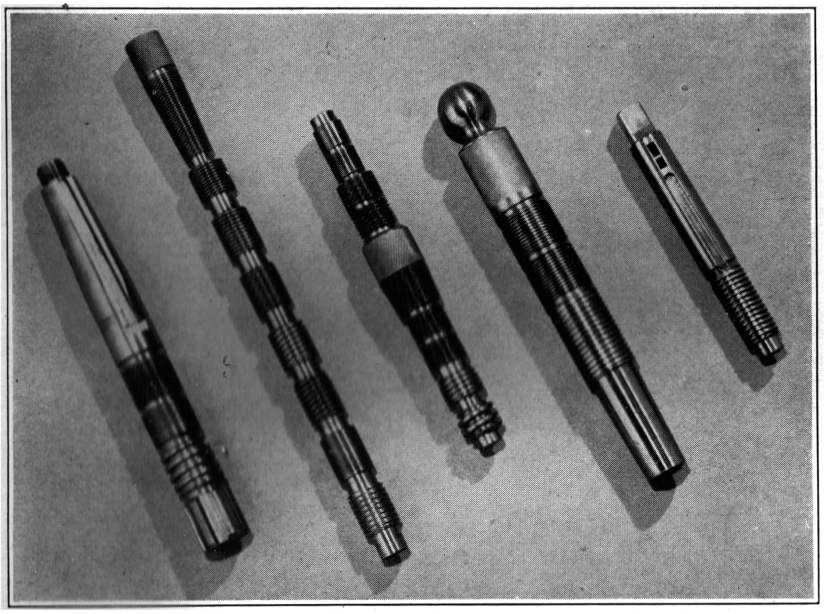

FIG. 123. A few of the threads that can be cut on an Atlas lathe.

Every Atlas screw-cutting lathe comes equipped with change gears and threading dial for cutting all threads in the following standards: National Coarse (U.S.S.), National Fine (S.A.E.), Acme, Square and Whitworth. Gear set-ups for all standard threads between 4 and 96 per inch are shown on the pictorial threading chart on the inside of the change-gear train (Fig. 124). Figure 126 is an enlargement of the Atlas threading chart. Gear data for odd-size threads are given at the end of this part of the Manual.

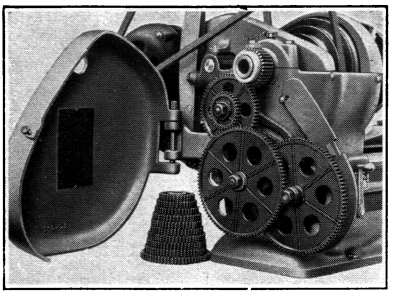

FIG. 124
Left end of Atlas lathe with gear guard open, showing change gears, gear train, and location of threading chart.

READING THE GEAR CHARTS

To simplify gear set-ups, the three different gear bracket positions have been assigned letters as shown in Figure 125. These designations will be found on the lathe threading chart as well as in all of the gear data in this section.

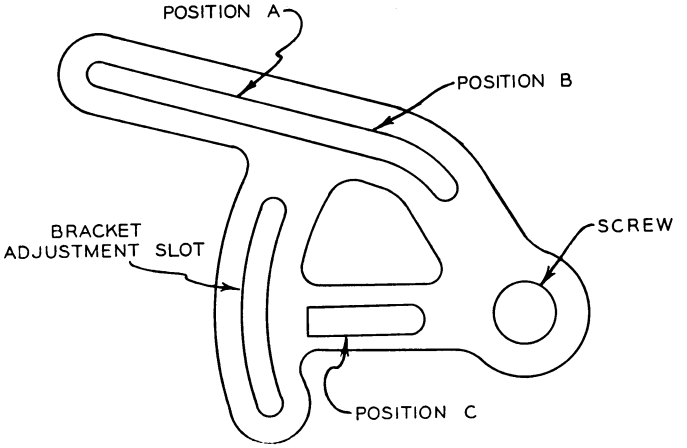

FIG. 125. Gear bracket positions.

The outer end of the longest bracket slot is called "Position A," the inner portion of the same slot is "Position B," and the shorter slot at the bottom is "Position C." These gear positions are approximate—they will vary with the size and number of the gears composing the train (see diagrams in Fig. 126).

SLEEVE AND BUSHING ASSEMBLY

Before setting up a train of change gears, examine one of the sleeve and bushing assemblies which hold the change gears to the gear bracket (Fig. 127). Each sleeve is long enough to accommodate two gears and has a double key which fits into the keyways in the gears. The sleeve and two gears fit over a bushing, and the assembly is bolted to the gear bracket. The washer is a bearing for the outer end of the sleeve.

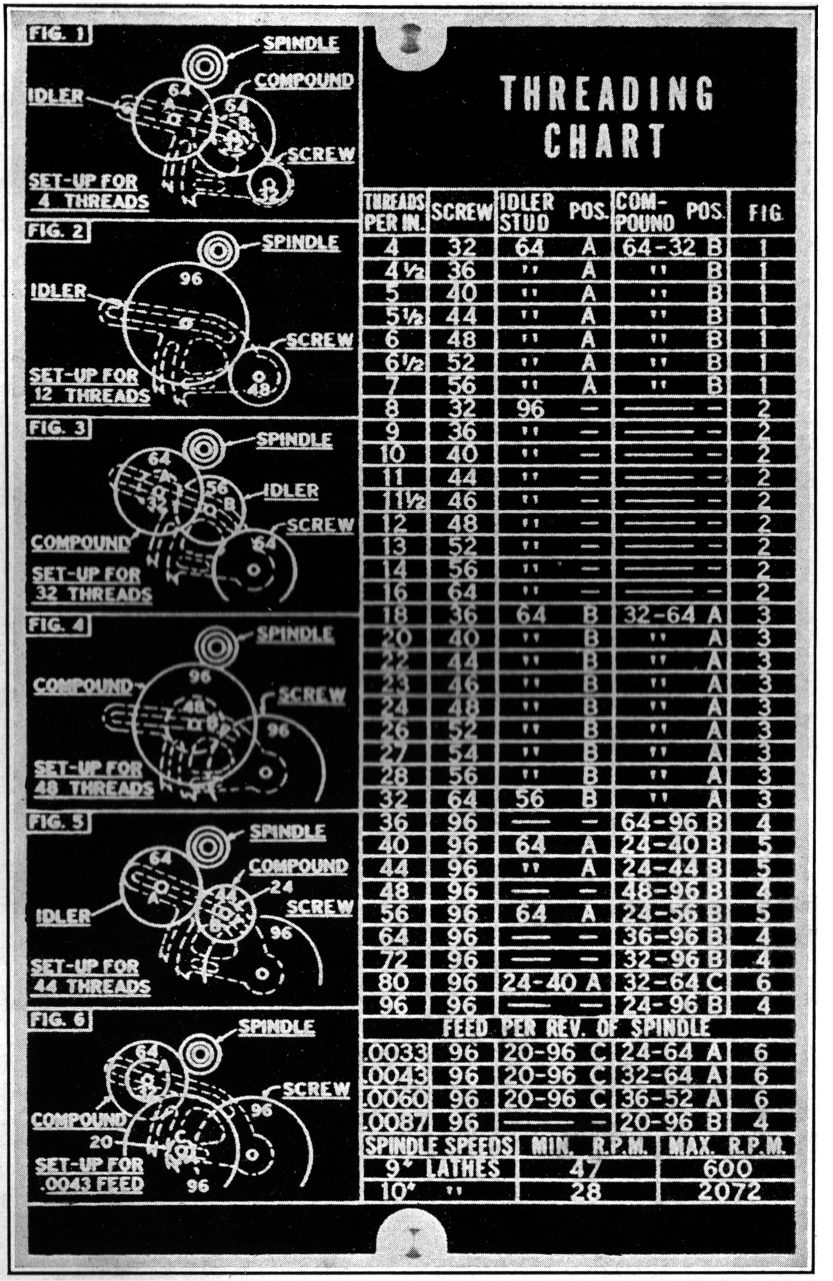

THREADING CHART

THREADS PER IN.	SCREW	IDLER STUD	POS.	COMPOUND	POS.	FIG.
4	32	64	A	64-32	B	1
4½	36	"	A	"	B	1
5	40	"	A	"	B	1
5½	44	"	A	"	B	1
6	48	"	A	"	B	1
6½	52	"	A	"	B	1
7	56	"	A	"	B	1
8	32	96	—	——	—	2
9	36	"	—	——	—	2
10	40	"	—	——	—	2
11	44	"	—	——	—	2
11½	46	"	—	——	—	2
12	48	"	—	——	—	2
13	52	"	—	——	—	2
14	56	"	—	——	—	2
16	64	"	—	——	—	2
18	36	64	B	32-64	A	3
20	40	"	B	"	A	3
22	44	"	B	"	A	3
23	46	"	B	"	A	3
24	48	"	B	"	A	3
26	52	"	B	"	A	3
27	54	"	B	"	A	3
28	56	"	B	"	A	3
32	64	56	B	"	A	3
36	96	—	—	64-96	B	4
40	96	64	A	24-40	B	5
44	96	"	A	24-44	B	5
48	96	—	—	48-96	B	4
56	96	64	A	24-56	B	5
64	96	—	—	36-96	B	4
72	96	—	—	32-96	B	4
80	96	24-40	A	32-64	C	6
96	96	—	—	24-96	B	4
FEED PER REV. OF SPINDLE						
.0033	96	20-96	C	24-64	A	6
.0043	96	20-96	C	32-64	A	6
.0060	96	20-96	C	36-52	A	6
.0087	96	—	—	20-96	B	4

SPINDLE SPEEDS	MIN. R.P.M.	MAX. R.P.M.
9" LATHES	47	600
10" "	28	2072

FIG. 126

Atlas threading chart for cutting all standard threads between 4 and 96 per inch. **Additional gear** train data is included in the tables at the end of this section.

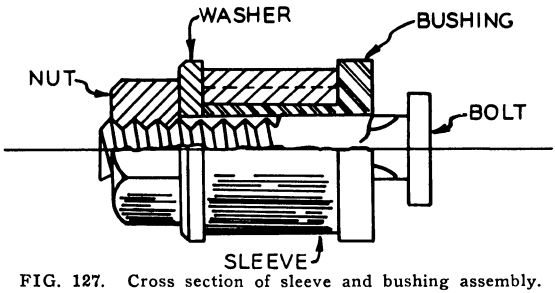

FIG. 127. Cross section of sleeve and bushing assembly.

Notice that in order to make this assembly complete, two gears must be mounted on the sleeve at one time. When both of the gears on a sleeve mesh with other gears in the train, they form a "compound" gear assembly. When only one of two gears on a sleeve meshes with the other gears in the train, it is called an "idler." The smaller gear, which is mounted on the sleeve with an idler, is called a "spacer" gear and does not mesh with any gear in the train (see Fig. 131).

GEAR CLEARANCE

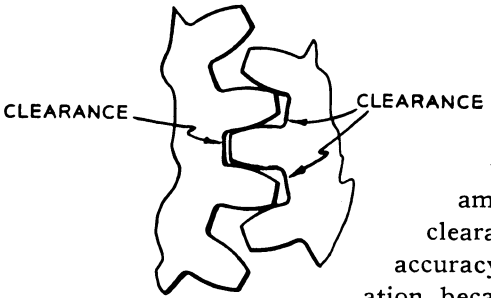

FIG. 128
Proper gear clearance.

When setting up the gear train, be sure to allow sufficient clearance between two meshing gears. Figure 128 shows two gears with the proper amount of clearance. Gear clearance does not reduce the accuracy of a thread cutting operation, because all play in the gears is taken up in one direction. A small amount of grease, preferably graphite grease, applied to the gear teeth will often aid in obtaining smoother, more quiet operation.

THE REVERSING MECHANISM

Right hand threads are cut with the carriage traveling toward the headstock. Left hand threads are cut with the carriage traveling toward the tailstock.

Whenever a new gear train has been set up, shift the reverse feed lever to test the direction of the carriage travel. Because some set-ups are simple-geared and some are compounded, the carriage travel will not necessarily be to the right when the reverse lever is shifted to the right. *Test the direction of carriage travel before starting to cut a thread.*

After the reversing lever has been shifted to the proper position, it should not be moved until the thread has been completed. ***This is especially important because a shift in the lever position destroys the relation between the threading dial and the lathe spindle, causing splitting of the thread.***

GEAR TRAINS FOR STANDARD THREADS

The following pages give detailed instructions for mounting gears for the more common thread sizes. Refer to these pages and the lathe threading chart when making these set-ups. "Back Position" of a sleeve or the screw stub means the position *toward* the headstock. "Front Position" is the position *away from* the headstock. The gear is tightened in position by locking the nut behind the large washer on the inside of the "Bracket Adjustment Slot" (Fig. 126).

GEAR TRAIN FOR 4 THROUGH 7 THREADS PER INCH

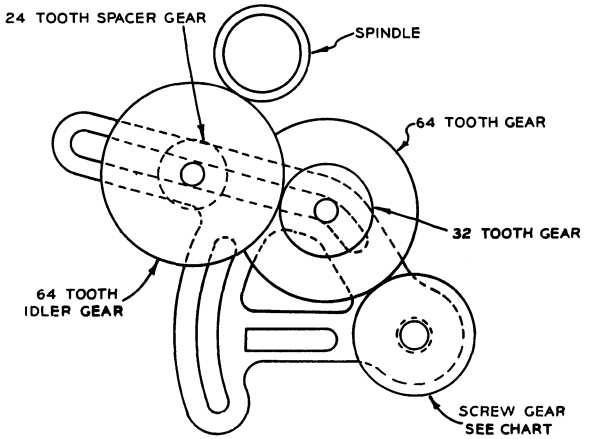

FIG. 129. Gear set-up for 4 through 7 threads per inch.

1. Place on back position of screw stub the gear listed in "Screw" column of threading chart.

2. Place 64 tooth gear and 32 tooth gear on sleeve and mount in Position B on gear bracket with 64 tooth gear in back position. Tighten so that 64 tooth gear meshes with gear on screw position.

3. Place 64 tooth gear and 24 tooth gear on a sleeve and mount in Position A with 24 tooth gear in back position. Tighten so that 64 tooth gear meshes with the 32 tooth gear in Position B. The 64 tooth gear is an idler; the 24 tooth gear is a spacer.

4. Swing entire gear bracket upward and tighten so that 64 tooth gear in Position A meshes with spindle gear.

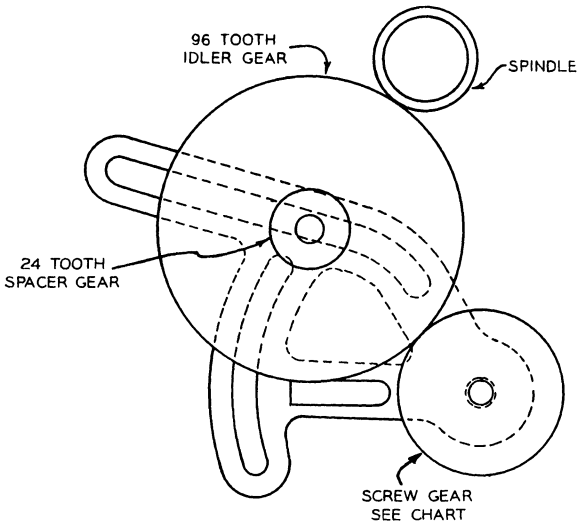

FIG. 130. Gear set-up for 8 through 16 threads per inch.

GEAR TRAIN FOR 8 THROUGH 16 THREADS PER INCH

1. Place on back position of screw stub the gear listed in "Screw" column of threading chart.

2. Place 96 tooth gear and 24 tooth gear on sleeve in Position B with 96 tooth gear in back position. Tighten so that 96 tooth gear meshes with gear in screw position. The 96 tooth gear is an idler; the 24 tooth gear is a spacer.

3. Swing entire gear bracket upward and tighten so that 96 tooth gear meshes with spindle gear.

GEAR TRAIN FOR 18 THROUGH 32 THREADS PER INCH

(See Fig. 131, page 101.)

1. Place on back position of screw stub the gear listed in "Screw" column of threading chart.

2. Place 64 tooth gear (or 56 tooth gear for 32 threads) and 20 tooth gear on sleeve and mount in Position B on gear bracket with 64 tooth gear in back position. Tighten so that 64 (or 56) tooth gear meshes with gear in screw position. The 64 (or 56) tooth gear is an idler; the 20 tooth gear is a spacer.

3. Place 64 tooth gear and 32 tooth gear on sleeve and mount in Position A with 32 tooth gear in back position. Tighten so that 32 tooth gear meshes with 64 (or 56) tooth gear in Position B.

4. Swing entire gear bracket upward and tighten so that 64 tooth gear in Position A meshes with spindle gear.

GEAR SET-UP FOR 18 THROUGH 32 THREADS PER INCH

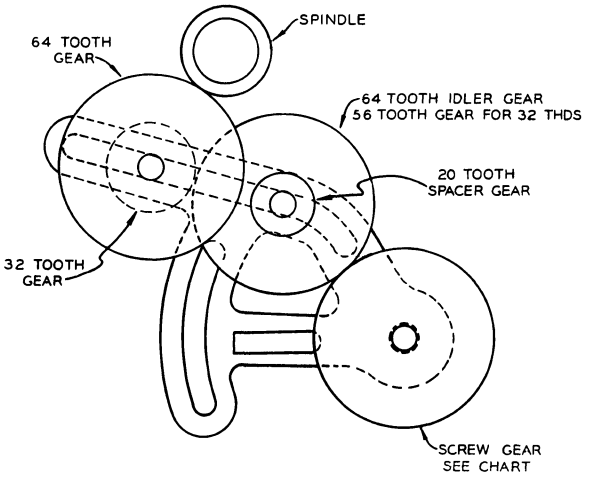

FIG. 131. Gear set-up for 18 through 32 threads per inch.

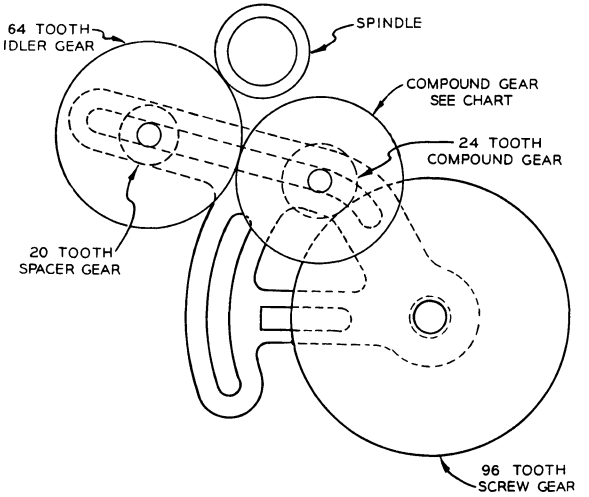

FIG. 132. Gear set-up for 40, 44 and 56 threads per inch.

GEAR TRAIN FOR 40, 44 AND 56 THREADS PER INCH

(See Fig. 132)

1. Place 96 tooth gear on back position of screw stub.

2. Place 24 tooth gear and proper compound gear, listed in "Compound" column of threading chart, on sleeve in Position B with the 24 tooth gear in back position. Tighten so that 24 tooth gear meshes with 96 tooth gear on screw stub.

3. Place 64 tooth gear and 20 tooth gear on sleeve in Position

A with 64 tooth gear in front position. Tighten so that 64 tooth gear meshes with the larger compound gear in Position B. The 64 tooth gear is an idler; the 20 tooth gear is a spacer.

4. Swing entire gear bracket upward and tighten so that 64 tooth idler gear in Position A meshes with spindle gear.

GEAR TRAIN FOR 36, 48, 64, 72 and 96 THREADS PER INCH

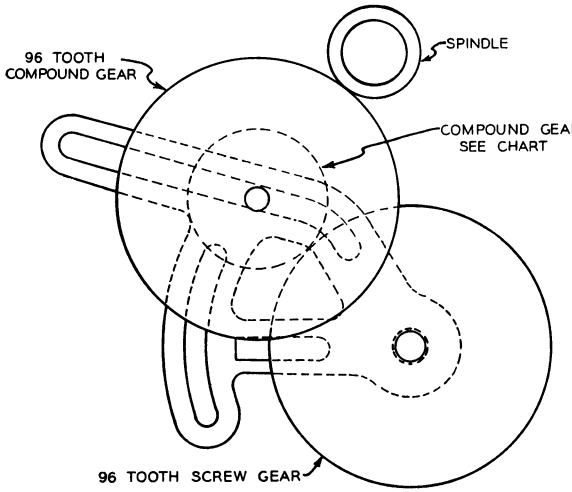

FIG. 133. Gear set-up for 36, 48, 64, 72 and 96 threads per inch.

1. Place 96 tooth gear on back screw position.

2. Place on sleeve in Position B a 96 tooth gear and compound gear listed in "Compound" column of threading chart. The 96 tooth gear should be in front. Tighten so that smaller gear meshes with 96 tooth gear on screw.

3. Swing entire gear bracket upward and tighten so that 96 tooth gear in Position B meshes with spindle gear.

GEAR TRAIN FOR 80 THREADS PER INCH

(See Fig. 134, page 103.)

This set-up requires three sleeve and bushing assemblies.

1. Place 96 tooth gear on front position of screw stub.

2. Place 40 tooth gear and 24 tooth gear on sleeve in Position C with 40 tooth gear in back position. Tighten so that 24 tooth gear meshes with 96 tooth gear on screw stub.

3. Place 64 tooth gear and 20 tooth gear on sleeve in Position B with 64 tooth gear in back position. Tighten so that 64 tooth gear meshes with 40 tooth gear in Position C. The 64 tooth gear is an idler; the 20 tooth gear is a spacer.

4. Place 32 tooth gear and 64 tooth gear on sleeve in Position A with 32 tooth gear in back position. Tighten so that 32 tooth gear meshes with 64 tooth gear in Position B.

5. Swing entire gear bracket upward and tighten so that 64 tooth gear in Position A meshes with spindle gear.

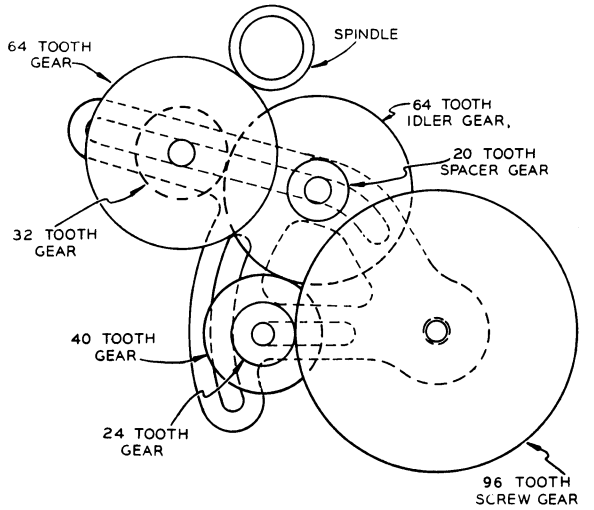

FIG. 134. Gear set-up for 80 threads per inch.

THREAD CUTTING TERMS

(Refer to Figure 135 below)

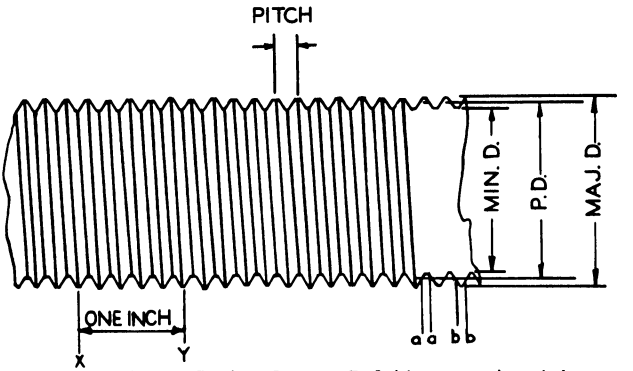

FIG. 135. Thread Cutting Terms. Definitions are given below.

MAJOR DIAMETER—The largest diameter of the thread of either the screw or the nut.

MINOR DIAMETER—The smallest diameter of the thread of either the screw or the nut.

PITCH DIAMETER—On a straight screw thread, the diameter of an imaginary cylinder, the surface of which would pass through the threads at such points as to make equal the width of the threads and the width of the spaces cut by the surface of the cylinder. In Figure 135 the lines representing the diameter "PD," are located so as to make spaces "aa" and "bb" equal. On a 60°

Vee-type thread and on National Form threads, the pitch diameter is simply the major diameter less the depth of the thread.

DEPTH OF THREAD—One-half the difference between the major diameter and the minor diameter. In lathe work, the DOUBLE DEPTH OF THREAD, which is the difference between the major and minor diameters, is a quite common term. Thus, knowing the major diameter required, subtracting from it the double depth of thread for the required pitch, gives the minor diameter. A table giving double depths of National Form threads for different pitches will be found on page 135.

PITCH—The distance from a point on a screw thread to a corresponding point on the next thread, measured parallel to the axis (see Fig. 135).

$$p = \text{Pitch of thread in inches} = \frac{1}{\text{Number of threads per inch}}$$

THREADS PER INCH—The number of complete threads in the space of one inch. In Figure 135, the distance between points X and Y represents one inch, and there are five threads per inch.

$$n = \text{Number of threads per inch} = \frac{1}{\text{pitch}}$$

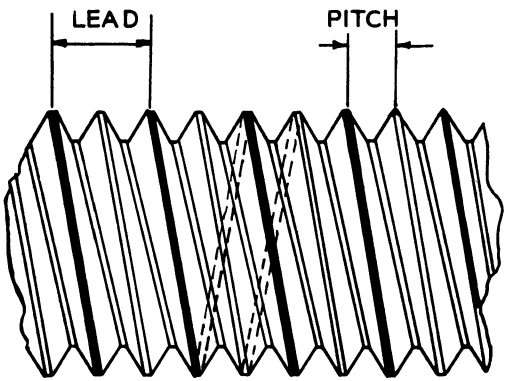

FIG. 136
Double Thread Screw. The lead is double the pitch.

LEAD — The distance a screw thread advances axially in one turn. On a single thread screw, the lead and the pitch are identical; on a double thread screw, the lead is twice the pitch; on a triple thread screw the lead is three times the pitch, etc.

Figure 136 shows a double thread screw. There are two separate grooves or helices around the screw, each of which advances twice the pitch in a single turn. If the pitch of this screw is $\frac{1}{8}$ inch, the lead is $\frac{1}{4}$ inch.

THREAD CUTTING TOOLS

Thread cutting tools must be ground to the form of thread desired. Clearance must be increased because of the rapid advance of the tool. Otherwise the grinding of thread cutting tools fol-

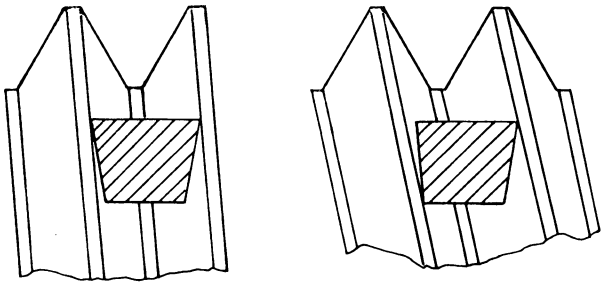

FIG. 137
"A" shows tool with sufficient clearance. When thread pitch is increased, as at "B," same tool has inadequate clearance.

lows the same general rules as the grinding of external tools (Parts 3 and 4).

Clean, accurate threads are impossible unless one side and the front of the tool are given enough clearance to permit the tool to advance as the work revolves. Figure 137 shows how a tool which is satisfactory for cutting a fine thread may not have enough clearance to cut a coarse thread. "Hogging" and rough threads are usually the result of insufficient clearance.

Thread tools are ground nearly flat across the top. When the tool is fed into the work at an angle, as with National Form threads, the tool should have a few degrees of side rake. When the tool is fed into the work at right angles, as with square threads, it should have a small amount of back rake.

CUTTING 60° TYPE THREADS

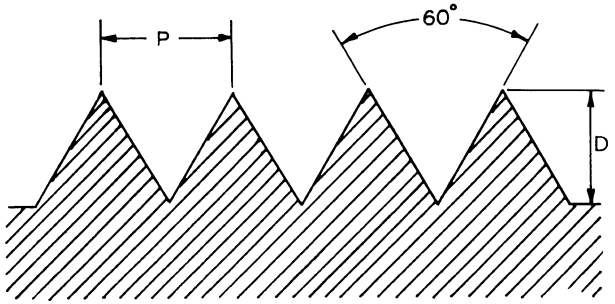

D=.866 x P
FIG. 138. 60° Vee Thread and Formula.

60 degree type threads include the 60° Vee thread (Fig. 138) and the American National Screw Thread (Fig. 139). The 60° Vee thread is cut very seldom, usually for small screws where the flat at the top and bottom of the National Form Thread would be so small that it approaches the Vee form. Small taps usually produce Vee-type threads, and the resulting holes accommodate the standard National Form Screws.

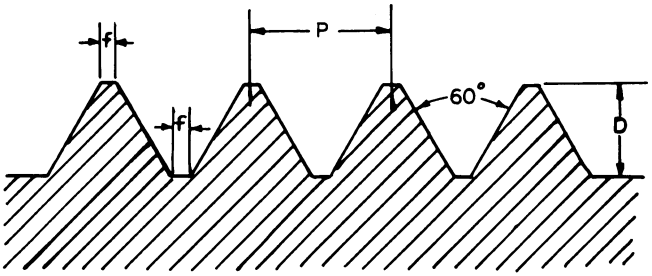

$D = .64952 \times P \qquad f = \frac{P}{8}$

FIG. 139. American National or National Form Thread and Formulas.

The American National Screw threads, (National Fine and National Coarse) are practically standard for automotive and machine shop work in the United States. These threads are 60° Vee

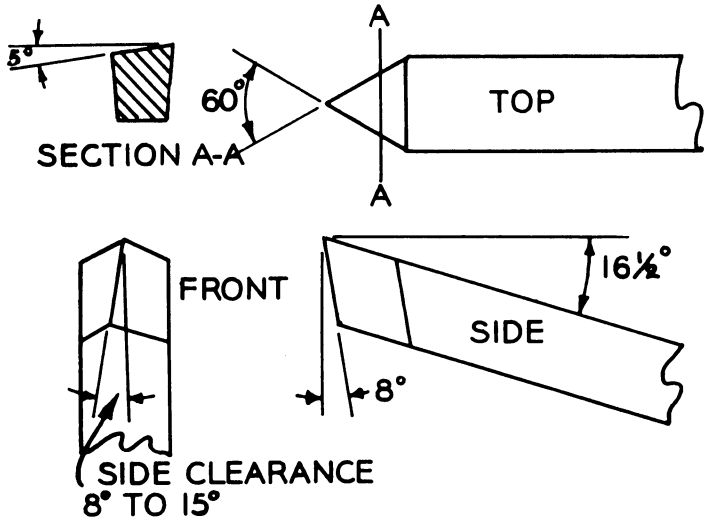

FIG. 140. Tool for cutting 60° type threads.

threads with the points cut off so that the depth is 75% of the depth of a Vee thread of the same pitch.

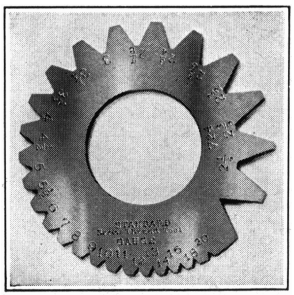

FIG. 141. N. F. Thread Gauge.

Figure 140 shows a tool bit ground for cutting sharp pointed Vee threads. This tool will also cut an exact National Form Screw thread when the point is ground flat to fit the proper slot in the National Form thread gauge (Fig. 141). Generally, however, the tool is left sharp pointed and the thread is cut with the regulation Vee bottom, but the top is left

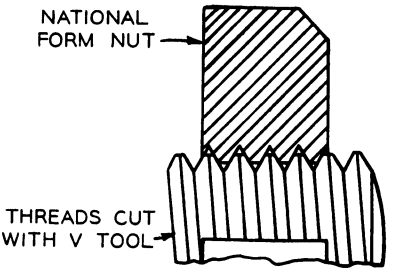

FIG. 142
The National Form nut fits the screw cut with a 60° Vee tool.

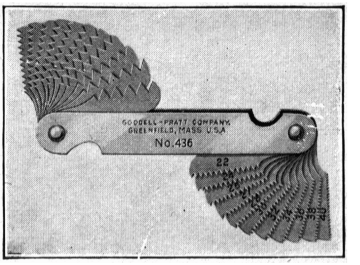

FIG. 143
National Screw Pitch Gauge.

with the proper amount of flat. Figure 142 shows how a screw cut in this manner fits a National Form nut. Only when desiring absolute maximum strength is the tool ground to the exact National Form.

The screw pitch gauge shown in Figure 143 is used to determine the exact pitch of a V-thread screw or nut. This gauge has thirty separate leaves with pitches between 4 and 42 per inch.

CIRCULAR THREADING TOOL

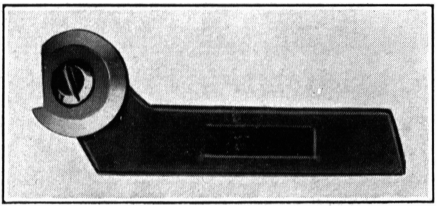

FIG. 144. Circular Threading Tool.

The threading tool shown in Figure 144 has become extremely popular because it can be used to cut all pitches of National Form threads with the slight difference in form mentioned on page 106. The sides of this tool are ready ground to an included angle of approximately 65 degrees. The extra 5° compensates for rake angle and the grinding of the tool —a perfect 60° thread is produced when the tool is set into the work properly (see page 109). The form of this tool also provides ample clearance for even the coarsest threads. By simply grinding the top surface (Fig. 145) and turning the tool as it wears, the entire circumference of 3¾ inches can be used for cutting.

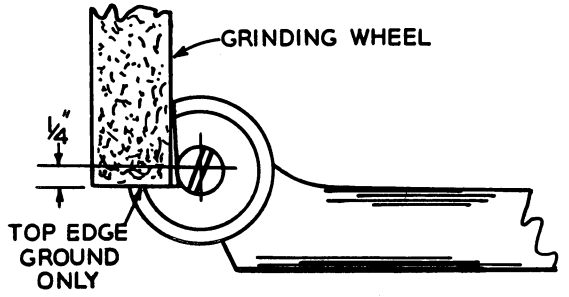

FIG. 145
Proper method of grinding the circular threading tool shown in Figure 144. The side faces are never ground.

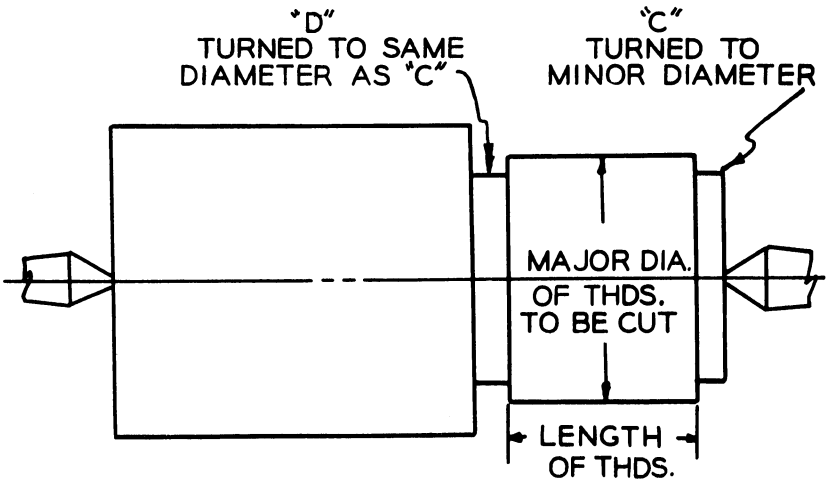

FIG. 146

PREPARING THE WORK FOR AN EXTERNAL 60° NATIONAL FORM THREAD

The work to be threaded is first turned to the exact major diameter of the desired thread. The beginner often finds it helpful to turn the grooves C and D (Fig. 146) to the exact minor diameter. The size of the minor diameter depends upon the form of the threading tool. If the thread is to be cut with a sharp pointed 60° tool, the minor diameter is equal to the major diameter less the Vee-Form Double Depth of Thread (Table V, page 135), or the major diameter less 1.732 × pitch. If a tool bit has been formed especially for a National Form thread, the correct minor diameter is listed in Table VI or Table VII, pages 136 and 137 (major diameter less 1.299 × pitch).

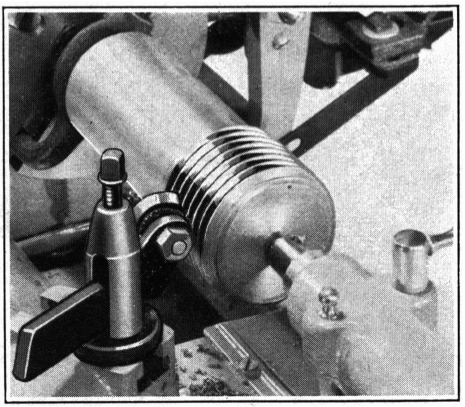

FIG. 147
Correct setting of tool and compound rest when cutting a 60° right hand thread.

Groove C permits accurate measurement with a micrometer of the bottom of the thread. When the tool point has cut to the depth of the groove C, the thread has been finished. Groove D permits the work to revolve freely at the end of each cut. *As soon as the beginner has become a little more familiar with threading practice, these grooves can be omitted.*

FIG. 148. Center Gauge.

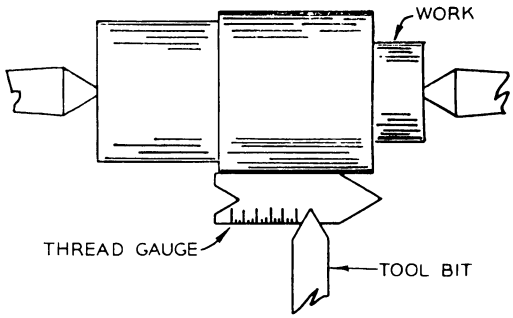

FIG. 149 (Right)
Using the center gauge to set the threading tool at an exact right angle to the work.

SETTING THE 60° THREADING TOOL

After the work has been properly prepared for threading, set the compound rest at the 29° angle shown in Figure 147. Mount the tool holder in the tool post so that the point of the tool is exactly on the lathe center line—tighten tool post screw just enough to hold the tool holder. Then use a center or thread gauge (Fig. 148) to set the tool point at an exact right angle to the work as shown in Figure 149. Tap lightly on the back of the tool holder when bringing it into position. A piece of white paper placed under the center gauge will aid in checking the fit of the tool in the Vee of the gauge. With the tool point at an exact right angle to the work, recheck the center line position and tighten tool post screw.

THE CUTTING OPERATION

Before starting the actual cutting of a right hand thread, be sure that the change gear train is assembled properly and that the reverse lever is in the correct position to feed the carriage toward the headstock. Adjust belts for a speed of 28 R.P.M. (see page 47).

Set the compound rest approximately in the center of its ways and advance the cross feed so that it is set at 0 with the tool close to the work. With the point of the tool about an inch to the right of the start of the thread, advance the tool with the compound rest so that the first cut will be about .003 inch.

Start the lathe and engage the half-nut lever on the carriage as described on page 111. The 29° angle of the compound rest should allow the back of the tool to take a fine chasing cut on the finished side of the thread while the cutting edge does the work of forming the thread. Apply plenty of lubricant to the work. When the point of the tool reaches the groove at the end of the thread (groove D in Figure 146), raise the half-nut lever on the carriage, back out the cross feed a turn or two, and return the carriage by hand to the starting point. Advance the cross feed to its original position

at 0, advance the compound rest for the desired depth of cut, and engage the half-nut lever for the second cut. All feeding is done with the compound rest. Follow the same routine on all succeeding cuts.

DEPTH OF CUT: The first cut should be about .003 inch, the next cuts about .005 inch each, and the following cuts gradually less. The last few cuts should be approximately .003 inch. A final pass through the thread with no advance whatsoever will often clean up any remaining high spots. For maximum accuracy take the last cuts with extreme care. Heavier cuts can be taken on the softer metals, such as brass and aluminum.

LUBRICANTS: When cutting steel use liberal quantities of a commercial cutting compound, lard oil or equivalent. With other metals use the type of lubricant recommended for general turning operations (Part 4).

THREAD CUTTING SPEEDS: The beginner in thread cutting should adjust belts to obtain a speed of 28 R.P.M. (page 47). This slow speed allows plenty of time to engage and disengage the half-nut lever. After more experience in cutting threads, higher speeds can be used up to approximately 1/3 or 1/2 the speeds recommended for turning the various materials (Part 4).

THE THREADING DIAL

The threading dial (Figs. 150 and 151) performs an important function by indicating the proper time to engage the half-nut lever so that the tool will enter the same groove of the thread for each cut. Without the threading dial it would be necessary to reverse the motor at the end of each cut and "wind" the tool out of the thread — a cumbersome method little used except when cutting metric and special fractional threads (page 119).

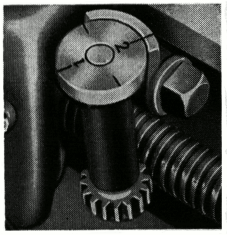

FIG. 150
Atlas Threading Dial.

RULES FOR THE USE OF THE THREADING DIAL

When cutting on even-numbered thread (such as 12, 14, 16, 32, etc. per inch), engage the half-nut lever when the stationary mark on the threading dial is in line with any one of the four marks in the center portion of the dial.

When cutting odd-numbered threads (such as 7, 9, 11, 23, 27, etc. per inch), engage the half-nut lever when the stationary mark on the threading dial is in line with either "1" or "2" in the center portion.

When cutting half-numbered threads (such as 4½, 5½, 6½, 11½, etc. per inch), engage half-nut lever at the same point on the threading dial for each cut of the thread.

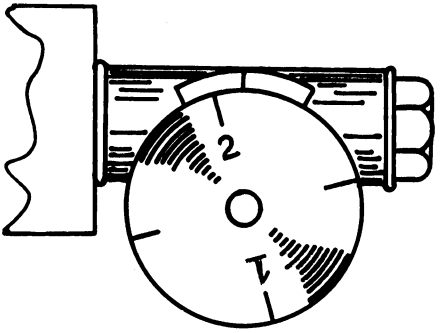

FIG. 151
Threading dial showing main markings. Other lines may be marked in by the operator as needed.

PRECAUTIONS IN CUTTING THREADS

Never disengage the half-nut lever in the middle of the thread without first backing out the tool with the cross feed.

Do not shift the reverse feed lever until the thread is completed.

If the work must be removed for checking the fit of a cut or for any other reason, be sure to replace the work with the tail of the lathe dog in the same slot of the face plate as before. Never remove work held in a chuck until the thread is completed.

When a long, heavy thread is being turned, considerable heat may be generated, causing the work to expand. If the work is mounted between centers, stop the lathe at regular intervals and check the tightness of the work against the centers. Take a light cut after checking in this way, because the work may have shifted a trifle in relation to the position of the tool bit. If the tool has a tendency to "hog in," check tool clearance.

CUTTING INTERNAL 60° NATIONAL SCREW THREADS

The tool shown in Figure 153 is designed for cutting internal 60° form threads and is mounted directly in the tool post exactly like a boring tool. Such a tool is included in the set of boring tools described on page 91. The angles shown are typical and satisfactory for threads as coarse as 12 per inch and holes as small as 5/8 inch. The point is ground to 60° and has a slight side rake as shown in the front view. It is very important to have plenty of front and side clearance—much more important than with the plain boring tool. The point of the tool is set exactly on the center line of the work.

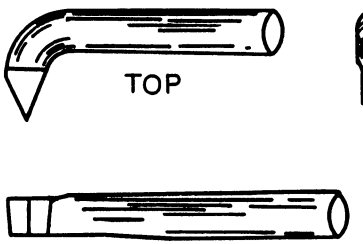

FIG. 152
Tool for cutting internal 60° threads.

PREPARING THE WORK FOR INTERNAL NATIONAL FORM THREADS

Work to be threaded internally is prepared much in the same manner as for cutting an external thread (see page 108). The work is first bored to the exact minor diameter. Beginners often turn grooves C and D to the exact major diameter as shown in Figure 154. If the thread is to be cut with a sharp pointed 60° tool, the major diameter is equal to the minor diameter plus the Vee-form Double Depth of Thread (Table V, page 135). If the tool bit is formed especially for a certain National Form thread, the correct major diameter is listed in Table VI or Table VII, pages 136 and 137.

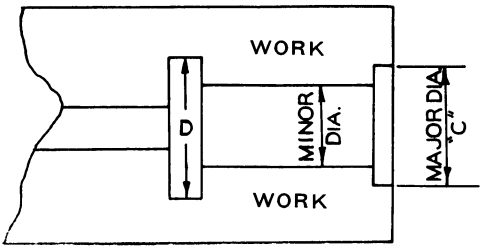

FIG. 153
Grooves C and D help the beginner when threading internally.

Groove C permits the beginner to measure accurately the bottom of the thread with a micrometer or caliper and serves as a guide for depth. When the tool point has cut to the depth of groove C, the thread has been finished. This outer groove

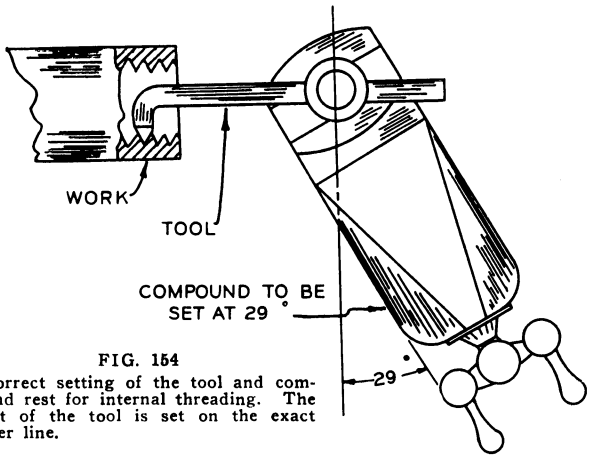

FIG. 154
Correct setting of the tool and compound rest for internal threading. The point of the tool is set on the exact center line.

is not necessary if the thread is being cut to fit a certain screw—the proper depth is then reached when the screw fits the thread correctly.

Groove D should be about twice as wide as the thread pitch and a few thousandths larger than the major diameter. This groove provides a brief interval at the end of each cut during which the work can revolve freely while the half-nut lever is disengaged. *The grooves C and D are omitted after the operator has learned internal thread cutting operations.*

CUTTING INTERNAL THREADS

The internal cutting operation is the same as the cutting of an external thread (page 109), with the following exceptions: First, the 29° angle of the compound rest is measured from the opposite side of the graduated base (Fig. 154), so that the reading is actually 61° at the point where the external reading would be taken (see Fig. 147).

Second, the compound rest feed is *toward* the operator for cutting and the cross feed is *advanced* to clear the work.

Due to the spring of an internal tool, cuts should be much lighter than when cutting external threads. The last finish cuts should be taken without changing the setting of the compound rest.

CUTTING LEFT HAND THREADS

Figure 155 shows the cutting of a left hand thread. The direction of carriage feed is toward the tailstock. Gear set-ups and general cutting procedure are exactly the same as for right hand threads with the changes in tool angles made necessary by the different direction of carriage travel. Clearance angles and side

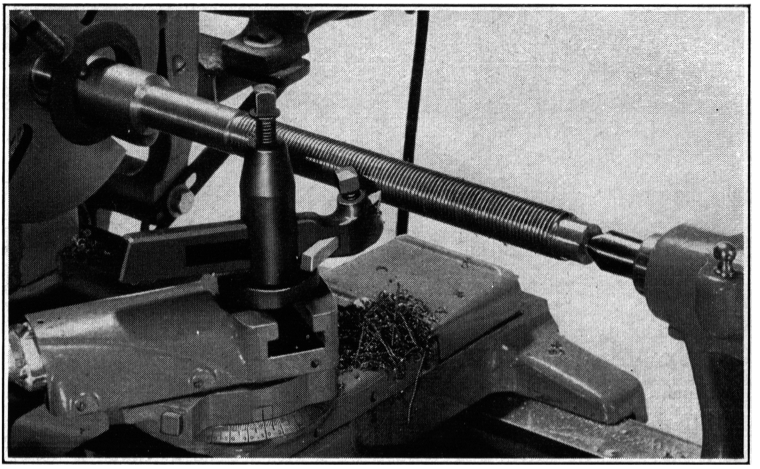

FIG. 155. Cutting a left hand thread.

rake should be the opposite of those shown in Figure 140. In cutting left hand 60° type threads, the compound rest should be set at 29° in the direction shown in Figure 154 which is opposite that shown in Figure 147.

CUTTING ACME THREADS

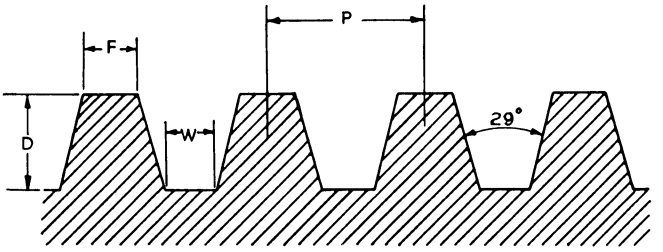

$D = \frac{P}{2} + .010''$ $F = .3707 \times P$

$W = .3707 \times P - .0052''$ MINOR DIA. = MAJOR DIA. - (P + .020)

FIG. 156. Acme Screw Thread and Formulas.

The Acme screw thread (Fig. 156) is often found in power transmissions, where heavy loads necessitate close-fitting threads. Another common application is in the lead screws and feed screws of precision machine tools. The lead screw, cross feed and compound rest feed screw of the Atlas lathe have Acme threads.

Figures 158 and 159 show the proper tool forms for cutting external and internal Acme threads. The forms must be checked with the Acme thread gauge (Fig. 157) during the grinding process.

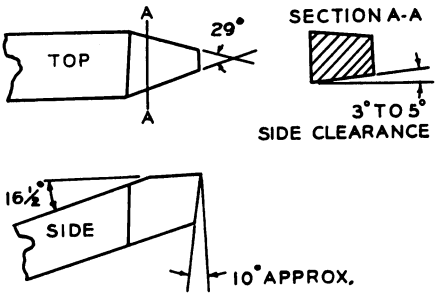

FIG. 158
Tool bit formed for cutting an external Acme thread.

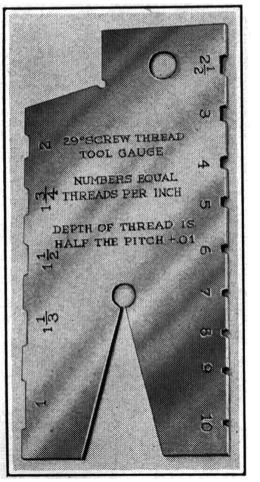

FIG. 157
Acme Thread Gauge.

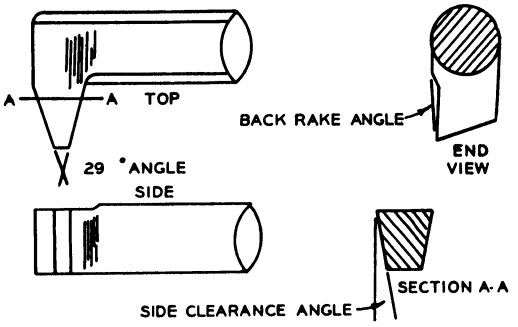

FIG. 159 (Left)
Tool bit formed for cutting an internal Acme thread.

The various steps in the cutting of an Acme thread are similar to those for 60° type threads (pages 105 to 111). Although the tool can be fed into the work at an angle with the compound rest feed, a better method is to feed directly into the work with the cross feed. The latter method results in a better thread—the readings on the cross feed must be taken carefully and remembered for each cut. Take lighter cuts than with 60° type threads because the total cutting face of the tool is longer.

CUTTING SQUARE THREADS

The square thread (Fig. 160) is rarely cut because it is a difficult job and results in a thread which is not so strong as the Acme. It is cut, however, for many vise and clamp screws and other worm-screw forms. The Acme thread is recommended for all such applications—it is stronger, easier to cut, and capable of closer fits.

In the cutting of a square thread with a large lead, the tool angles must be absolutely correct. Clearance should be allowed on two sides,tapering from both the top and front of the tool (see

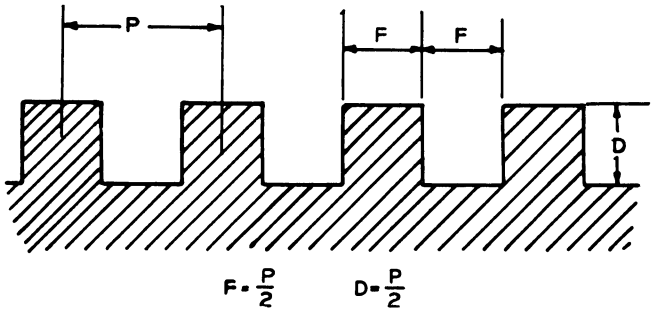

FIG. 160. Square Thread and Formulas.

Figs. 161 and 163). Figure 162 explains how the important angle Φ must be determined.

External square threads should be cut to the minor diameter plus about .005 inch, internal square threads to the major diameter plus about .005 inch. The additional .005 inch allows a small clearance at the bottom of the thread, which helps to compensate for any small inaccuracies in the tool or cutting.

The tool must be fed directly into the work with the cross feed (or compound rest feed), and care must be taken to avoid chatter and "hogging-in." The simplest method is to set the compound rest at 0°, feed in with the compound, and back out and return the tool with the cross feed. Take very light cuts when turning or boring a square thread.

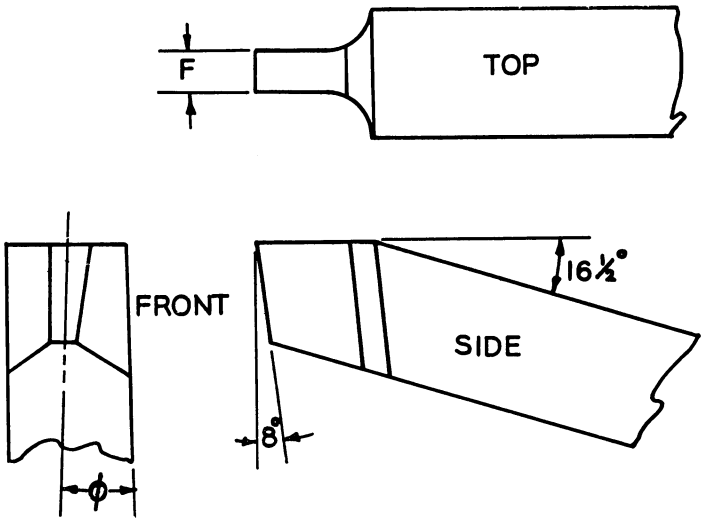

FIG. 161. Tool bit for cutting external square threads.

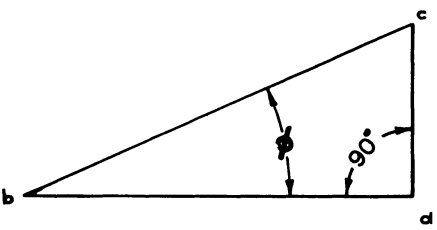

FIG. 162

Determining the angle ϕ for grinding tools for cutting square threads. Draw line "ab" equal to the circumference of the thread (3.1416 × major diameter). Then draw line "ac" at right angles to "ab" and equal in length to the thread pitch (or lead, if a multiple thread). Draw line "bc." The angle ϕ is equal to the angle made by lines "ba" and "bc."

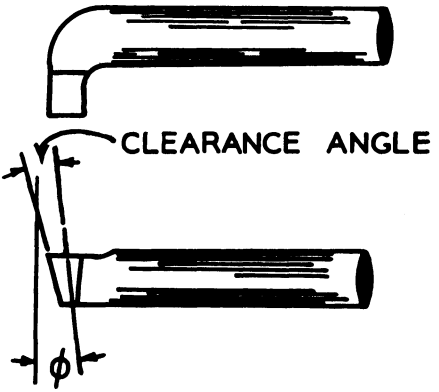

FIG. 163
Tool bit for cutting internal square threads.

WHITWORTH FORM THREAD

Figure 164 shows the Whitworth thread, a form which is standard in the British Isles for nearly all types of threads. The smaller sizes of the Whitworth form are called British Standard Fine.

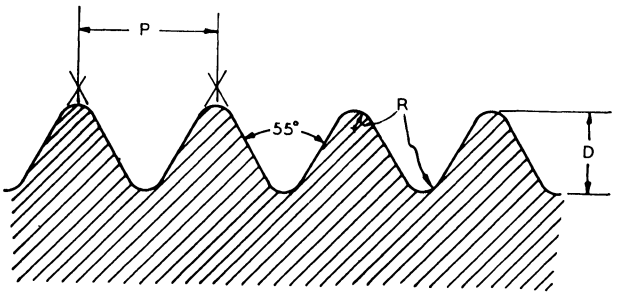

R = .1373 P D = .64033 P

FIG. 164. Whitworth Thread and Formulas.

A Whitworth thread is cut in much the same manner as an Acme thread. There are two major differences: The thread angle is smaller, and the radius at the top and bottom of the thread must be shaped properly with a formed tool.

CUTTING PIPE-THREADS

Figure 165 shows the exact form of the American Standard Pipe thread when cut correctly in a pre-formed die. When turned into the receiving nut, the tapered lines cause the tight "jamming" for which the pipe thread is so well known. In a straight form this thread is used in oil cups and several types of electrical fittings.

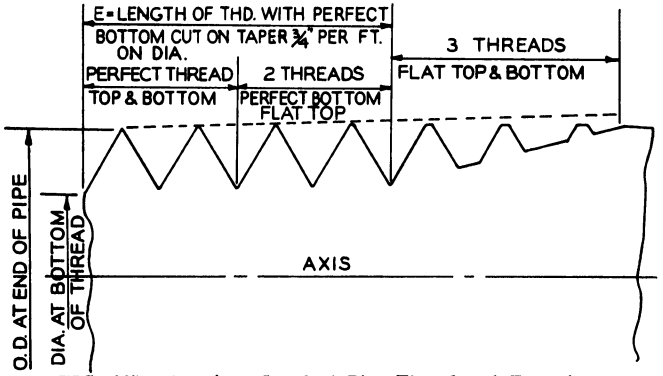

FIG. 165. American Standard Pipe Thread and Formulas.

In order to cut the American Standard Pipe thread on the lathe without special dies or equipment, some variation in form is necessary. Excellent pipe-type threads, satisfactory for commercial use and having the same jamming effect when forced into the nut or coupling, can be cut with a 60° Vee type tool and a set-over of the tailstock to obtain a taper of approximately ¾ inch per foot. If the stock cannot be mounted between lathe centers, the taper attachment (Part 8) is required for the cutting operation. The threading operation is similar to that for a standard Vee thread and produces a thread resembling the threaded portion shown in Figure 166. Figure 167 shows a type of pipe center recommended for supporting the stock while cutting pipe type threads.

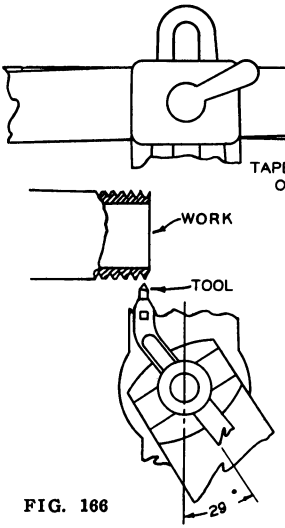

FIG. 166

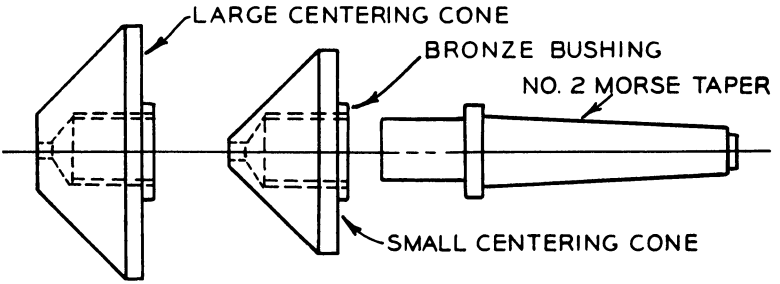

FIG. 167. A pipe center which can be made easily in the small shop.

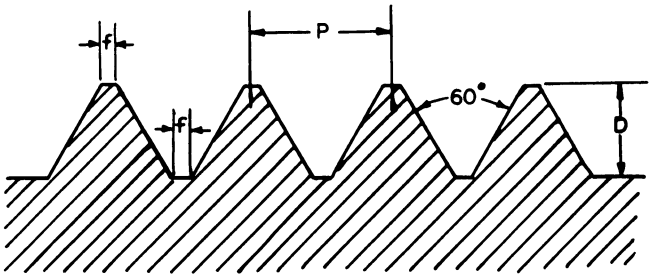

$D = .64952 \times P \qquad f = \frac{P}{8}$

FIG. 168. Metric Standard Screw Thread Form and Formulas.

CUTTING METRIC THREADS

(Also Special Fractional Threads)

The Metric Standard screw thread form shown in Figure 168 is accepted almost universally wherever the metric system is the standard of measurement. The Metric thread angle and form is identical with that of the National Form thread, and the cutting operation is exactly the same, with one important exception: the motor must be reversed after each cut. This procedure is necessary because metric threads have no definite relation to the threading dial.

The following cutting method applies to metric threads and also to special fractional threads, wire feeds, and the threads in Table III, page 132, not marked "Exact": After the half-nut lever on the carriage is engaged for the first cut, it should not be moved until the thread has been completed. As the tool reaches the end of each cut, stop the lathe, back out the cross feed, and reverse the motor until the tool has been returned to the starting position. Then advance the cross feed to its original 0 position, turn in the compound rest feed for the next cut, start the motor and repeat the cutting operation.

Metric threads require a special chart (Table IV), spacer, and extra sleeve, bushing and bolt assembly, available at the factory.

MULTIPLE THREADS

Multiple threads of almost any pitch and number of starts can be cut by two methods. The threading dial is quick, simple and accurate for some double threads and some quadruple or "multiple-four" threads. Multiple threads can also be cut by "slipping teeth" on either the spindle gear or the screw gear (see page 121).

Multiple threading requires larger tool clearance angles. Figure 136 shows a double screw thread and Figure 169 shows a

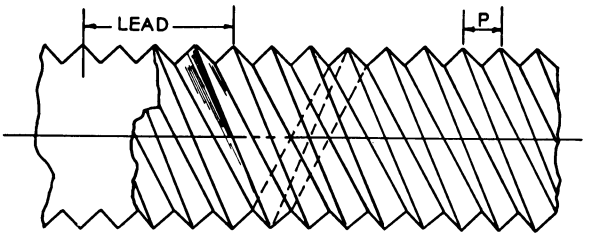

FIG. 169
Quadruple screw thread. The lead is four times the pitch.

quadruple or multiple four thread. These drawings illustrate how the angle of advance has been increased—*the tool clearance must be sufficient for the lead, not merely the pitch.*

USING THE THREADING DIAL FOR MULTIPLE THREADS

Although only four marks are cut into the top of the threading dial, there are actually sixteen different positions where the half-nut lever can be engaged. Figure 170 shows the intermediate points between the four mainmarkings. These points can be marked with pencil, or the positions easily estimated. In the following paragraphs, Lead in Threads Per Inch is equal to 1 divided by Lead in Inches.

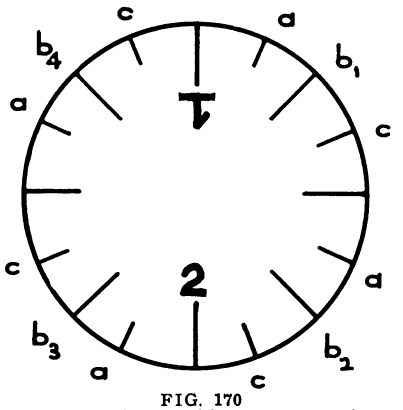

FIG. 170
Intermediate positions on threading dial which can be used for cutting. The numbers "1" and "2" are marked in; the lettered positions may be marked as needed.

CUTTING DOUBLE THREADS WITH LEAD IN THREADS PER INCH DIVISIBLE BY FOUR, BUT NOT BY EIGHT (4, 12, 20, 28, etc.)

A single thread of this lead is cut by engaging the half nuts at any of the four mainmarkings on the threading dial. After the first cut is taken, the half nuts are engaged at any of the "b" positions, and the tool travels half-way between the first thread grooves, producing a double thread.

Example: To Cut a Double Thread with a Pitch of 1/24 inch and a Lead of 1/12 inch. Set up the change gears for the lead in threads per inch (12, not 24). Take the first cut by engaging half nuts at any of the four marked lines on the threading dial. Then return to the starting point, engage half nuts at any one of the "b" positions, and take the same first cut on the second groove of the thread. The compound rest feed remains at one setting until both grooves have been cut to that depth.

CUTTING DOUBLE AND QUADRUPLE THREADS WITH LEADS IN THREADS PER INCH DIVISIBLE BY TWO, BUT NOT BY FOUR (6, 10, 14, 18, etc.)

A single thread of this lead can be cut only by engaging the half nuts in any one of the four mainmarkings on the threading dial. To cut the second groove of the double thread, the half nuts are engaged at any one of the "b" positions, and the cutting operation is the same as in the preceding paragraph.

For quadruple threads of this lead engage the half nuts at any of the four mainmarkings for the first groove, at any of the "a" positions for the second groove, at any of the "b" positions for the third groove, and at any of the "c" positions for the fourth groove. The setting of the compound rest feed is changed only after each of the four grooves has been cut to the depth of setting.

CUTTING DOUBLE AND QUADRUPLE THREADS WITH LEADS IN THREADS PER INCH DIVISIBLE BY ONE, BUT NOT BY TWO (ODD NUMBERS)

A single thread of this lead can be cut by engaging the half nuts in position "1" or position "2." To cut the second groove of the double thread, the half nuts are engaged at either of the unnumbered marks on the threading dial. The cutting operation is the same as in the preceding paragraph.

For quadruple threads of this lead engage the half nuts at position "1" for the first groove, at position "b_1" for the second groove, at either of the unnumbered lines on the dial for the third groove, and at "b_2" for the fourth groove. The setting of the compound rest feed is changed only after each of the four grooves has been cut to the depth of setting.

CUTTING MULTIPLE THREADS BY SLIPPING TEETH ON THE SPINDLE GEAR

Double and quadruple threads can also be cut by "slipping teeth" on the spindle gear. This practice is not so common as the use of the threading dial, but is not complicated.

To cut multiple threads by slipping teeth on the spindle gear: cut the complete first groove to a minor diameter dependent upon pitch of the desired thread. The change gear train should be arranged for the desired lead. It is important to use the same 0 point of reference to cut each thread—be sure to remember this point during the cutting operations.

Refer to the table on page 122, then slip the required number of teeth by marking adjacent teeth on the spindle gear and the gear

meshing with the spindle gear. Drop the entire gear bracket low enough to disengage the gears and turn the spindle gear forward the proper number of teeth by rotating spindle by hand. Raise the gear bracket so that the previously marked gear tooth meshes with the newly selected spindle gear tooth.

To Cut Double Threads:—Slip 16 teeth to cut the second groove.

To Cut Quadruple Threads:—Slip 8 teeth to cut the second groove, 8 teeth more to cut the third groove, and 8 teeth more to cut the fourth groove.

Each thread groove is cut to its complete depth and finished before starting the next groove.

CARRIAGE FEEDS

The automatic longitudinal carriage feed per spindle revolution is obtained by setting up the gear train in the same manner as for thread cutting (pages 95 to 103). The feed in inches is equal to $\frac{1}{\text{threads per inch}}$. For example, a feed of .0087 inch requires the gear set-up as 114.9 threads per inch.

The four most common carriage feeds, as shown in the threading chart (page 97), are .0087, .0060, .0043, and .0033 inch per spindle revolution. Refer to the threading chart and the four following paragraphs when changing these gear set-ups.

Table I on page 128 includes gear set-ups for other carriage

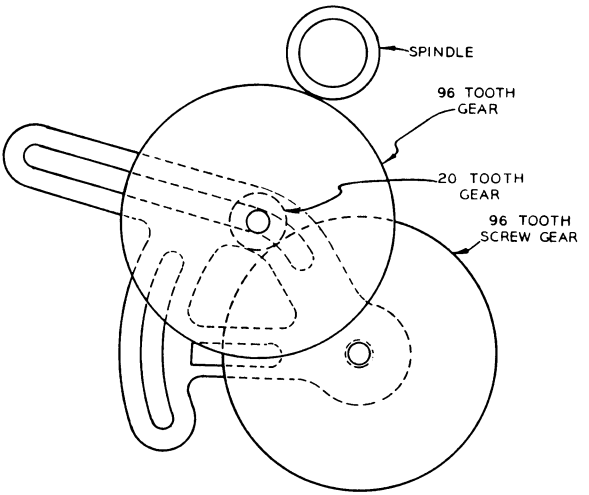

FIG. 171. Gear set-up for .0087 inch carriage feed.

feeds obtainable with the standard set of gears. Three finer feeds require an extra gear and a special bushing which is easily made in the lathe (see page 130).

GEAR TRAIN FOR .0087 INCH CARRIAGE FEED

(See Fig. 171, page 122)

1. Place 96 tooth gear in back position on screw stub.
2. Place 96 tooth gear and 20 tooth gear on sleeve in Position B, with 96 tooth gear in front position. Tighten so that 20 tooth gear meshes with 96 tooth gear on screw stub.
3. Swing entire gear bracket upward and tighten so that 96 tooth gear in Position B meshes with spindle gear.

GEAR TRAIN FOR .0060 INCH CARRIAGE FEED

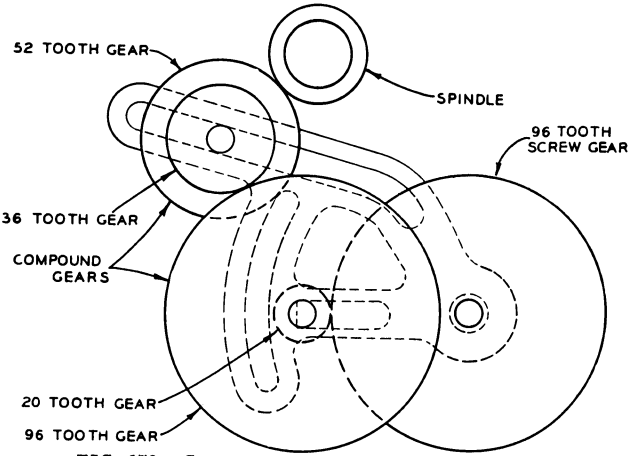

FIG. 172. Gear set-up for .0060 inch carriage feed.

1. Place 96 tooth gear in back position on screw stub.
2. Place 96 tooth gear and 20 tooth gear on sleeve in Position C, with 96 tooth gear in front position. Tighten so that 20 tooth gear meshes with 96 tooth gear on screw stub.
3. Place 52 tooth gear and 36 tooth gear on sleeve in Position A, with 52 tooth gear in back position. Tighten so that 36 tooth gear meshes with 96 tooth gear in Position C.
4. Swing entire gear bracket upward and tighten so that 52 tooth gear in Position A meshes with spindle gear.

GEAR TRAIN FOR .0043 INCH CARRIAGE FEED

(See Fig. 173, page 124)

1. Place 96 tooth gear in back position on screw stub.
2. Place 96 tooth gear and 20 tooth gear on sleeve in Position C, with 96 tooth gear in front position. Tighten so that 20 tooth gear meshes with 96 tooth gear on screw stub.

GEAR TRAIN FOR .0043 INCH CARRIAGE FEED

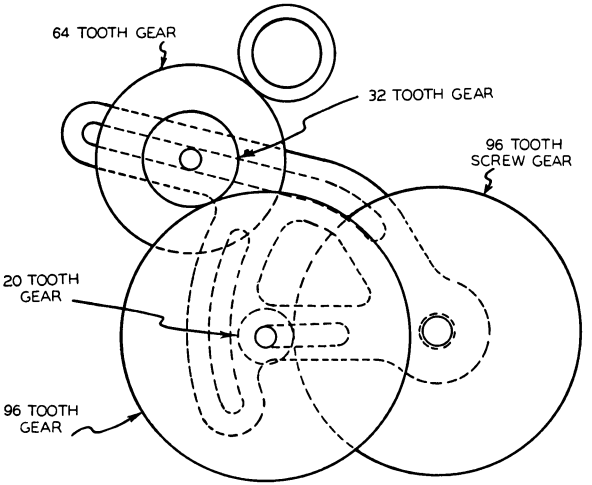

FIG. 173. Gear set-up for .0043 inch carriage feed.

3. Place 64 tooth gear and 32 tooth gear on sleeve in Position A, with 64 tooth gear in back position. Tighten so that 32 tooth gear meshes with 96 tooth gear in Position C.

4. Swing entire gear bracket upward and tighten so that 64 tooth gear in Position A meshes with spindle gear.

GEAR TRAIN FOR .0033 INCH CARRIAGE FEED

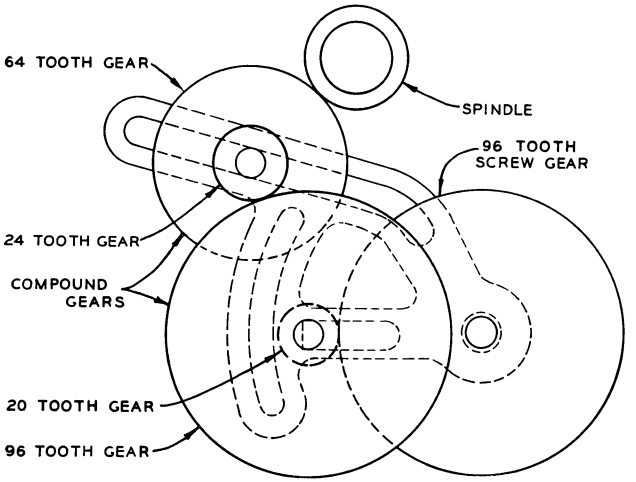

FIG. 174. Gear set-up for .0033 inch carriage feed (see page 125).

GEAR TRAIN FOR .0033 INCH CARRIAGE FEED

(See Fig. 174, page 124)

1. Place 96 tooth gear in back position on screw stub.

2. Place 96 tooth gear and 20 tooth gear on sleeve in Position C, with 96 tooth gear in front position. Tighten so that 20 tooth gear meshes with 96 tooth gear on screw stub.

3. Place 64 tooth gear and 24 tooth gear on sleeve in Position A, with 64 tooth gear in back position. Tighten so that 24 tooth gear meshes with 96 tooth gear in Position C.

4. Swing entire gear bracket upward and tighten so that 64 tooth gear in Position A meshes with spindle gear.

SPECIAL THREADS AND FEEDS

Between the coarsest thread, 4 threads per inch, and the finest feed, .0018 inch or 553 threads per inch, over a thousand threads and feeds have been charted by Atlas engineers. Tables I, II and III, pages 128-133, give proper gear set-ups for a wide variety of special threads and feeds. Most of these set-ups are exact—some are accurate to the limits mentioned.

Table IV, page 134, gives set-ups for metric threads with pitch between 0.5 and 7.0 millimeters. Metric threads require a special chart (Table IV), spacer, and an extra sleeve, bushing and bolt assembly, available at the Atlas factory.

ELECTRICAL COIL WINDING ON THE ATLAS LATHE

Figure 175 shows a coil winding operation with a simple guide mounted in place of the tool post on the compound rest. This set-up is very popular with electrical shops and has done much to make coil winding a simple job on the Atlas lathe. This guide is available at the Atlas factory.

Feeds are available on the Atlas lathe to match the diameter of B & S mag-

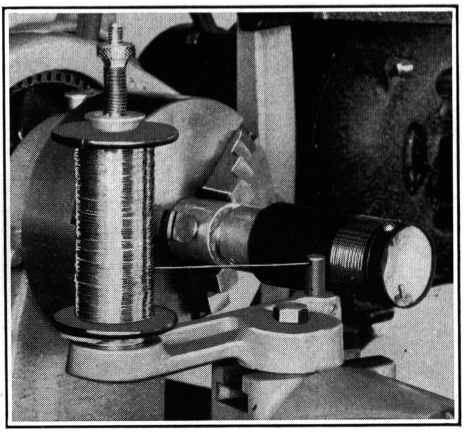

FIG. 175. Winding a coil on the Atlas lathe.

net wire in sizes between 12 and 40, using bare wire or any of the following insulations: single cotton, double cotton, single silk, double silk, enamel, silk enamel, and cotton enamel. Gear set-ups for enamel wire winding are given in Tables XIX, XXVI and XXVII at the end of this part of the Manual.

Feeds are also available on the Atlas lathe for spring making, wire wrapping and coil winding with steel and iron wire in the following gauges: American Steel and Wire Company, music wire, American or B & S, and Washburn and Moen. Pages 145 to 155 include gear data for winding iron and steel wire and wires other wires other than enamel insulation.

TABLES FOR THREAD CUTTING

I.....CARRIAGE FEEDS

II.....EXTRA FINE CARRIAGE FEEDS

III.....ODD-PITCH THREADS

IV.....METRIC THREADS

V.....DEPTH AND DOUBLE DEPTH OF NATIONAL FORM THREADS

VI.....NATIONAL COARSE THREAD DIMENSIONS

VII.....NATIONAL FINE THREAD DIMENSIONS

VIII.....FRACTIONAL SIZE THREAD DIMENSIONS

IX.....MACHINE SCREW THREAD DIMENSIONS

X.....WHITWORTH THREAD DIMENSIONS

XI....BRITISH ASSOCIATION THREAD DIMENSIONS

XII.....INTERNATIONAL STANDARD THREAD DIMENSIONS—METRIC

XIII.....FRENCH STANDARD THREAD DIMENSIONS

XIV.....ACME STANDARD THREAD DIMENSIONS

XV.....SQUARE THREAD DIMENSIONS

XVI.....STRAIGHT PIPE THREAD DIMENSIONS

XVII.....STOVE BOLT THREAD DIMENSIONS

XVIII to XXVII..GEAR SET-UPS FOR COIL WINDING

TABLE I — GEAR SET-UPS FOR CARRIAGE FEEDS

62 different carriage feeds between .0018 and .0091 inch per spindle revolution are available on the Atlas Lathe in addition to the four most common feeds which are pictured and described in detail between pages 122 and 125. When the material or job requires a certain feed, refer to the table below. Feeds for electrical coil winding begin on page 145. See page 130 for extra fine carriage feeds.

Feed Inches	Threads per Inch	Screw	Position C F	Position C B	Position A F	Position A B	Note
.0091	109.7	96B	96	24	56	64	
.0088	113.8	96B	96	24	54	64	
.0086	116.9	96B	96	24	46	56	
.0085	117.8	96B	96	24	44	54	
.0085	118.2	96B	96	24	52	64	
.0082	122.2	96B	96	24	44	56	
.0080	124.8	96B	96	24	40	52	
.0078	128.0	96B	96	24	48	64	
.0077	129.6	96B	96	24	40	54	
.0076	131.7	96B	96	20	56	64	
.0075	133.6	96B	96	24	46	64	
.0074	134.4	96B	96	24	40	56	
.0074	135.2	96B	96	20	46	54	
.0073	136.5	96B	96	20	54	64	
.0072	138.7	96B	96	24	36	52	
.0072	139.6	96B	96	24	44	64	
.0071	140.2	96B	96	20	46	56	
.0071	141.4	96B	96	20	44	54	
.0071	141.8	96B	96	20	52	64	
.0069	144.0	96B	96	24	36	54	
.0068	146.6	96B	96	20	44	56	
.0067	149.3	96B	96	24	36	56	
.0067	149.8	96B	96	20	40	52	
.0065	153.6	96B	96	20	48	64	
.0064	155.5	96B	96	20	40	54	
.0064	156.0	96B	96	24	32	52	
.0062	160.3	96B	96	20	46	64	
.0062	161.3	96B	96	20	40	56	
.0062	162.0	96B	96	24	32	54	
.0061	164.6	96B	96	24	56	96	e
.0060	166.4	96B	96	20	36	52	
.0060	167.6	96B	96	20	44	64	

Continued on Page 129

Table I—Continued

Feed Inches	Threads per Inch	Screw	Position C F	Position C B	Position A F	Position A B	Note
.0060	168.0	96B	96	24	32	56	
.0059	170.7	96B	96	24	36	64	
.0058	172.8	96B	96	20	36	54	
.0056	177.2	96B	96	24	52	96	e
.0056	179.2	96B	96	20	36	56	
.0054	184.3	96B	96	20	40	64	
.0053	187.2	96B	96	20	32	52	
.0052	192.0	96B	96	24	32	64	
.0051	194.4	96B	96	20	32	54	
.0051	197.5	96B	96	20	56	96	e
.0050	200.3	96B	96	24	46	96	e
.0050	201.6	96B	96	20	32	56	
.0049	204.8	96B	96	20	36	64	
.0048	208.0	96B	96	24	24	52	f
.0048	209.5	96B	96	24	44	96	e
.0047	212.7	96B	96	20	52	96	e
.0046	216.0	96B	96	24	24	54	f
.0045	224.0	96B	96	24	24	56	f
.0043	230.4	96B	96	20	32	64	
.0042	240.4	96B	96	20	46	96	e
.0040	249.6	96B	96	20	24	52	
.0040	251.3	96B	96	20	44	96	e
.0039	256.0	96B	96	24	24	64	f
.0039	259.2	96B	96	20	24	54	
.0037	268.8	96B	96	20	24	56	
.0036	276.5	96B	96	20	40	96	e
.0035	288.0	96B	96	24	32	96	e
.0033	299.5	96B	96	20	20	52	c
.0033	307.2	96B	96	20	24	64	
.0032	311.0	96B	96	20	20	54	c
.0031	322.6	96B	96	20	20	56	c
.0029	345.6	96B	96	20	32	96	e
.0027	368.6	96B	96	20	20	64	c

SYMBOLS:

c—extra 20 tooth gear
e—extra 96 tooth gear
f—extra 24 tooth gear

F—position away from headstock
B—position toward headstock

TABLE II — EXTRA FINE CARRIAGE FEEDS

These three feeds require the special studs and bushing described below. See gear set-up, page 131.

Feed Inches	Threads per Inch	Screw	Position C F	Position C B	Position A F	Position A B
.0026	384.0	96B	96	24	24	96
.0022	460.8	96B	96	20	24	96
.0018	553.0	96B	96	20	20c	96

SYMBOLS:

F—position away from headstock
B—position toward headstock
c—extra 20 tooth gear

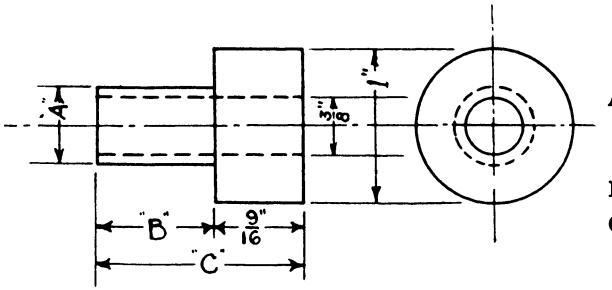

FIG. 176

STUD "M"

A—½", a bearing fit for inside of standard bushing.

B—¾" plus .010".

C—1 5/16" plus .010".

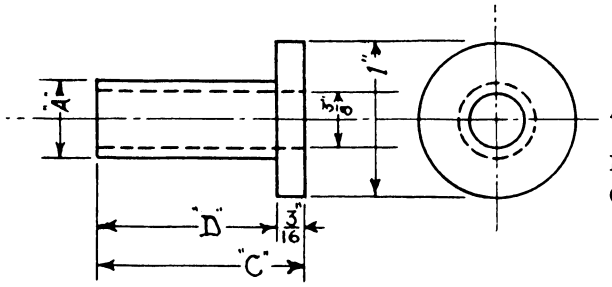

FIG. 177

STUD "N"

A—Same as for Stud "M" above.

B—1⅛" plus .010".

C—Same as for Stud "M" above.

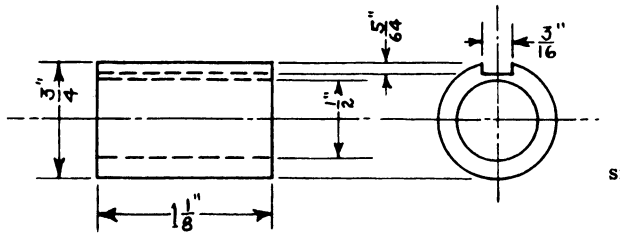

FIG. 178

BUSHING "P"

Complete Dimensions shown at left.

For bushing "P," use key 3/16" x 5/32" x 1-1/8". (Grind off of one side of a standard 3/16" x 3/16" key.) 2 Standard 3/8" Carriage Bolts, 2-3/8" overall length are required. Washers and nuts from standard assembly are suitable. Material on above parts:—Cold rolled steel.

FIGURE 179
GEAR POSITIONS FOR EXTRA FINE CARRIAGE FEEDS

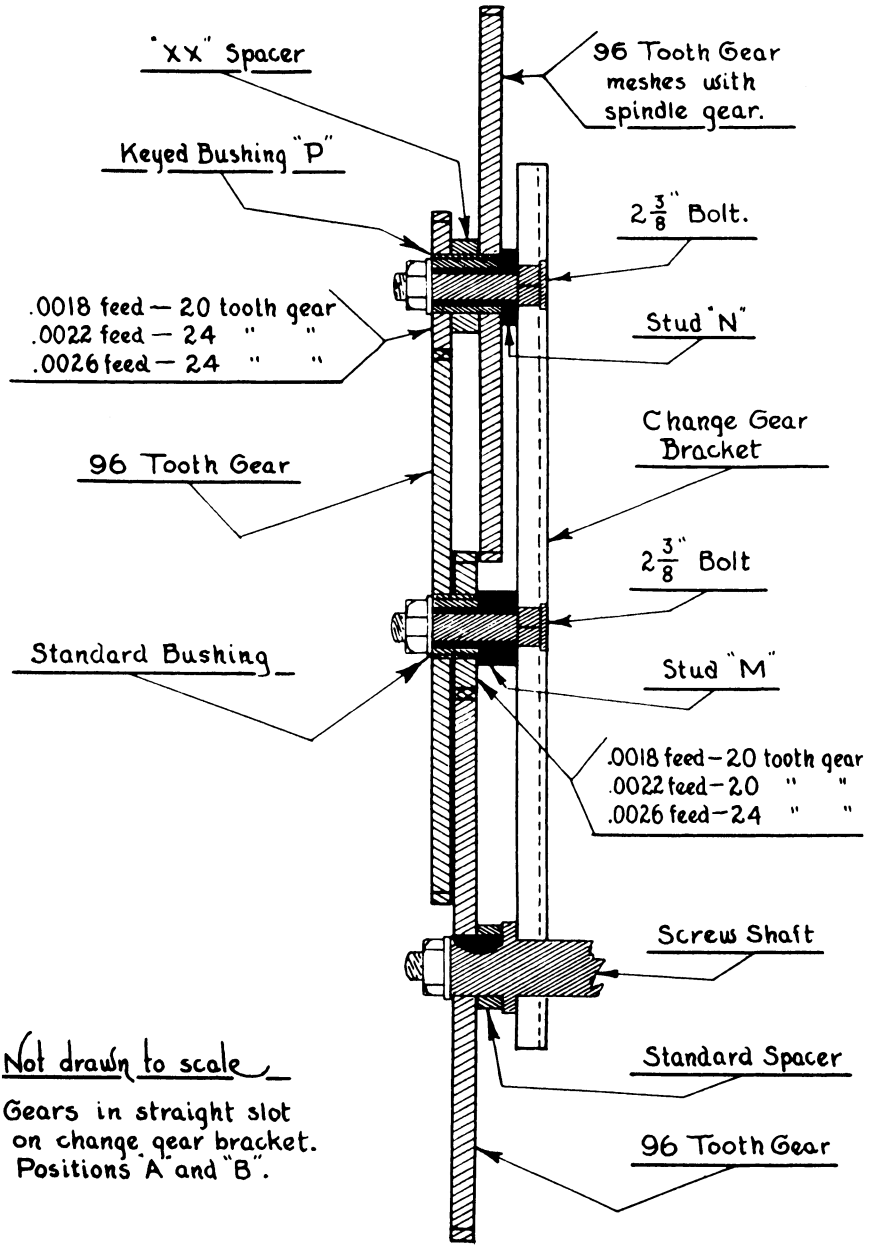

TABLE III — GEAR SET-UPS FOR THREADS FROM 7½ THROUGH 79 PER INCH NOT SHOWN ON THE ATLAS THREADING CHART

The threading dial can be used when cutting threads below marked "Exact" in the column under "Accuracy." All other threads must be cut in the same manner as metric threads (see page 119). The special spacer and extra sleeve, bushing and bolt assembly required for some of these set-ups is available at the Atlas factory.

Threads per Inch	Accuracy per Inch	Screw	Position C		Position B		Position A		Note
			B	F	B	F	B	F	
7.5	Exact	40F	—	—	36	48	64I	20S	
8.5	1/3500	44F	20	36	64I	24S	46	64	*
9.5	1/2000	52F	24	40	64I	20S	46	56	*
10.5	Exact	56F	—	—	48	64	64I	20S	
12.5	Exact	64F	—	—	40	32			
					32	20	24S	64I	*
13.5	Exact	52F	—	—	—	—	24S	96I	
15	Exact	54F	—	—	40	36	64I	20S	
17	1/3000	40F	44	36	54I	24S	46	64	*
19	1/1500	40F	44	54	52I	xxS	24	56	*
21	Exact	56F	—	—	54	36	64I	20S	
25	Exact	40F	40	32	56I	20S	32	64	d*
29	1/1500	46F	36	40	64I	xxS	20	56	*
30	Exact	96F	—	—	40	32	64I	20S	
31	1/2000	56F	36	20	54I	24S	52	64	*
33	Exact	96F	—	—	44	32	64I	32S	
34	1/1100	48F	46	20	56I	24S	52	64	*
35	Exact	56F	40	32	54I	xxS	32	64	*
37	1/1300	54F	48	20	52I	24S	56	64	*
38	1/2000	52F	48	20	54I	24S	46	56	*
39	Exact	96F	—	—	52	32	64I	32S	
41	1/1000	64F	32	20	56I	24S	40	64	*
42	Exact	96F	—	—	56	32	64I	20S	
43	1/2000	46F	46	32	56I	xxS	20	52	g*
45	Exact	54F	40	24	64I	20S	32	64	*
46	Exact	96F	—	—	46	24	64I	32S	
47	1/1000	96F	—	—	40	24	46	54	
49	Exact	56F	—	—	64	32	32	56	h
50	Exact	64F	40	24	44I	xxS			
					24	40	54	48	**df

Continued on page 133.

Table III—Continued

Threads per Inch	Accuracy per Inch	Screw	Position C B	Position C F	Position B B	Position B F	Position A B	Position A F	Note
51	1/950	96F	—	—	36	20	44	52	
52	Exact	96F	—	—	52	24	64I	32S	
53	1/3000	96F	—	—	36	20	44	54	
54	Exact	96F	—	—	54	24	64I	32S	
55	Exact	64F	44	24	40I	xxS			
					24	40	54	48	**df
57	1/3000	56F	56	20	52I	24S	44	64	*h
58	1/1400	46F	36	20	64I	xxS	20	56	*c
59	1/1800	46F	44	24	54I	xxS	20	56	*
60	Exact	96F	40	24	64I	xxS	36	54	*
61	1/1500	96F	—	—	52	24	46	54	
62	1/3000	96F	—	—	44	20	46	54	
63	Exact	64F	—	—	54	24	32	56	
65	Exact	96F	40	24	64I	xxS	32	52	*
66	Exact	64F	44	24	56I	20S	24	54	*f
67	1/740	64F	46	32	46I	xxS			
					24	48	64	44	**g
68	1/1100	96F	—	—	46	20	52	64	
69	Exact	64F	46	24	56I	20S	24	54	*f
70	Exact	96F	40	24	64I	xxS	32	56	*
71	1/630	96F	—	—	48	20	52	64	
73	1/730	96F	36	20	64I	24S	32	54	*
74	1/1300	96F	54	20	—	—	56	64	
75	1/625	52F	36	20	64I	xxS	20	64	*c
76	1/2200	96F	—	—	52	20	46	56	
77	Exact	96F	44	24	56I	20S	32	56	*h
78	Exact	96F	—	—	48	24	32	52	
79	1/3100	54F	54	20	48I	xxS	24	52	*j

SYMBOLS:

c—extra 20 tooth gear
d—extra 40 tooth gear
f—extra 24 tooth gear
g—extra 46 tooth gear
h—extra 56 tooth gear
j—extra 54 tooth gear

F—position away from headstock
B—position toward headstock
I—idler gear (page 98)
S—spacer gear (page 98)
xx—spacer made by turning down a 20 tooth gear to an outside diameter of 1-1/16 inch.

*—extra sleeve, bushing and bolt assembly

TABLE IV — GEAR SET-UPS FOR METRIC THREADS

Certain metric threads require a special spacer, and an extra sleeve, bushing and bolt assembly, available at the Atlas factory.

Two of the standard change gears furnished with the Atlas Lathe, the 52 tooth gear and the 44 tooth gear, combine to give a ratio of 44/52 or .846154, which is an almost exact function of 2.54, the English to Metric ratio. Thus, it is possible to cut metric threads very close to the standard Metric pitches.

Refer to page 119 when cutting metric threads.

Pitch mm.	Screw	Position C B	Position C F	Position B B	Position B F	Position A B	Position A F	Note
.5	96B	24	56	40	44	64I	20S	*
.75	44B	24	40	xxS	64I	96	52	*
1.0	44B	32	40	xxS	64I	96	52	*
1.25	44B	—	—	64I	xxS	52	96	
1.5	44B	24	48	40	52	64I	20S	*
1.75	44B	56	40	xxS	64I	96	52	*‡
2.0	40B	24	44	36	52	64I	20S	*
2.5	44B	52	48	—	—	20S	96I	
3.0	44B	52	40	—	—	20S	96I	
3.5	44B	56	48	40	52	64I	20S	*
4.0	40B	48	44	36	52	64I	20S	*
4.5	40B	54	44	36	52	64I	20S	*
5.0	24B	52	44	—	—	20S	96I	
5.5	20B	52	48	—	—	24S	96I	
6.0	20B	52	44	—	—	24S	96I	
7.0	24B	52	44	40	56	64I	20S	*

SYMBOLS:

*—extra sleeve, bushing and bolt assembly

xx—spacer made by turning down a 20 tooth gear to an outside diameter of 1-1/16 inch

F—position away from headstock

B—position toward headstock

I —idler gear (page 98)

S—spacer gear (page 98)

‡—extend slot at position A about 1/16 inch (by filing)

TABLE V

DEPTH AND DOUBLE DEPTH OF NATIONAL FORM THREADS

This table shows Depth and Double Depth for National Form Threads cut with a formed tool, and also when cut with a Vee type tool. See text, page 106. The two columns at the extreme right give the proper depth of feed to obtain a given thread depth with the compound rest set at 29° (page 109).

Threads per Inch	Pitch Inches	National Form Tool		Vee Form Tool		Depth of Feed Single Depth	
		Single Depth of Thread	Double Depth of Thread	Single Depth of Thread	Double Depth of Thread	N. F. Tool	Vee Form Tool
4	.2500	.1624	.3248	.1894	.3789	.186	.216
4½	.2222	.1443	.2887	.1684	.3368	.165	.193
5	.2000	.1299	.2598	.1516	.3031	.148	.173
5½	.1818	.1181	.2362	.1378	.2755	.135	.157
6	.1667	.1083	.2165	.1263	.2525	.124	.144
7	.1429	.0928	.1856	.1082	.2165	.106	.123
8	.1250	.0812	.1624	.0947	.1894	.093	.108
9	.1111	.0722	.1443	.0842	.1684	.083	.095
10	.1000	.0650	.1299	.0758	.1515	.074	.087
11	.0909	.0590	.1181	.0689	.1377	.067	.078
12	.0833	.0541	.1083	.0631	.1263	.062	.072
13	.0769	.0500	.0999	.0583	.1166	.057	.067
14	.0714	.0464	.0928	.0541	.1082	.053	.062
16	.0625	.0406	.0812	.0473	.0947	.046	.054
18	.0556	.0361	.0722	.0421	.0842	.041	.047
20	.0500	.0325	.0650	.0379	.0758	.037	.043
22	.0454	.0295	.0590	.0345	.0690	.034	.038
24	.0417	.0271	.0541	.0316	.0632	.031	.036
27	.0370	.0241	.0481	.0281	.0562	.028	.032
28	.0357	.0232	.0464	.0270	.0541	.027	.031
30	.0333	.0217	.0433	.0253	.0506	.025	.029
32	.0313	.0203	.0406	.0237	.0474	.023	.027
36	.0278	.0180	.0361	.0211	.0421	.021	.024
40	.0250	.0162	.0325	.0189	.0379	.019	.021
44	.0227	.0148	.0295	.0172	.0345	.017	.020
48	.0208	.0135	.0271	.0157	.0315	.015	.018
50	.0200	.0130	.0260	.0151	.0303	.015	.017
56	.0179	.0116	.0232	.0135	.0271	.013	.016
64	.0156	.0101	.0203	.0118	.0237	.012	.014
72	.0139	.0090	.0180	.0105	.0210	.010	.012
80	.0125	.0081	.0162	.00945	.0189	.009	.011
96	.0104	.0068	.0136	.00901	.01802	.008	.010

Note: Using Formed Tool—Minor Diameter = Major Diameter minus Double Depth of Thread in National Form Tool column.

Using Vee Tool—Minor Diameter = Major Diameter minus Double Depth of Thread in Vee Form Tool column.

TABLE VI

NATIONAL COARSE THREAD SERIES

(Formerly U. S. Standard)

THREAD DIMENSIONS AND TAP DRILL SIZES

Nominal Size	Threads per Inch	Major Diameter Inches	Minor Diameter Inches	Pitch Diameter Inches	Tap Drill for 75% Thread
1	64	.0730	.0527	.0629	53
2	56	.0860	.0628	.0744	50
3	48	.0990	.0719	.0855	47
4	40	.1120	.0795	.0958	43
5(1/8)	40	.1250	.0925	.1088	38
6	32	.1380	.0974	.1177	36
8	32	.1640	.1234	.1437	29
10	24	.1900	.1359	.1629	25
12	24	.2160	.1619	.1889	16
1/4"	20	.2500	.1850	.2175	7
5/16"	18	.3125	.2403	.2764	F
3/8"	16	.3750	.2938	.3344	5/16"
7/16"	14	.4375	.3447	.3911	U
1/2"	13	.5000	.4001	.4500	27/64"
9/16"	12	.5625	.4542	.5084	31/64"
5/8"	11	.6250	.5069	.5660	17/32"
3/4"	10	.7500	.6201	.6850	21/32"
7/8"	9	.8750	.7301	.8028	49/64"
1"	8	1.0000	.8376	.9188	7/8"
1 1/8"	7	1.1250	.9394	1.0322	63/64"
1 1/4"	7	1.2500	1.0644	1.1572	1- 7/64"
1 3/8"	6	1.3750	1.1585	1.2667	1- 7/32"
1 1/2"	6	1.5000	1.2835	1.3917	1-11/32"
1 3/4"	5	1.7500	1.4902	1.6201	1- 9/16"
2"	4 1/2	2.0000	1.7113	1.8557	1-25/32"
2 1/4"	4 1/2	2.2500	1.9613	2.1057	2- 1/32"
2 1/2"	4	2.5000	2.1752	2.3376	2 1/4"
2 3/4"	4	2.7500	2.4252	2.5876	2 1/2"
3"	4	3.0000	2.6752	2.8376	2 3/4"
3 1/4"	4	3.2500	2.9252	3.0876	3"
3 1/2"	4	3.5000	3.1752	3.3376	3 1/4"
3 3/4"	4	3.7500	3.4252	3.5876	3 1/2"
4"	4	4.0000	3.6752	3.8376	3 3/4"

TABLE VII

NATIONAL FINE THREAD SERIES

(Formerly S. A. E.)

THREAD DIMENSIONS AND TAP DRILL SIZES

Nominal Size	Threads per Inch	Major Diameter Inches	Minor Diameter Inches	Pitch Diameter Inches	Tap Drill for 75% Thread
0	80	.0600	.0438	.0519	3/64″
1	72	.0730	.0550	.0640	53
2	64	.0860	.0657	.0759	50
3	56	.0990	.0758	.0874	45
4	48	.1120	.0849	.0985	42
5(1/8)	44	.1250	.0955	.1102	37
6	40	.1380	.1055	.1218	33
8	36	.1640	.1279	.1460	29
10	32	.1900	.1494	.1697	21
12	28	.2160	.1696	.1928	14
1/4″	28	.2500	.2036	.2268	3
5/16″	24	.3125	.2584	.2854	I
3/8″	24	.3750	.3209	.3479	Q
7/16″	20	.4375	.3726	.4050	25/64″
1/2″	20	.5000	.4351	.4675	29/64″
9/16″	18	.5625	.4903	.5264	33/64″
5/8″	18	.6250	.5528	.5889	37/64″
3/4″	16	.7500	.6688	.7094	11/16″
7/8″	14	.8750	.7822	.8286	13/16″
1″	14	1.0000	.9072	.9536	15/16″
1 1/8″	12	1.1250	1.0168	1.0709	1- 3/64″
1 1/4″	12	1.2500	1.1418	1.1959	1-11/64″
1 3/8″	12	1.3750	1.2668	1.3209	1-19/64″
1 1/2″	12	1.5000	1.3918	1.4459	1-27/64″

TABLE VIII

FRACTIONAL SIZES

NATIONAL SPECIAL THREAD SERIES
THREAD DIMENSIONS AND TAP DRILL SIZES

Nominal Size	Threads per Inch	Major Diameter Inches	Minor Diameter Inches	Pitch Diameter Inches	Tap Drill for 75% Thread
1/16″	64	.0625	.0422	.0524	3/64″
5/64″	60	.0781	.0563	.0673	1/16″
3/32″	48	.0938	.0667	.0803	49
7/64″	48	.1094	.0823	.0959	43
1/8″	32	.1250	.0844	.1047	3/32″
9/64″	40	.1406	.1081	.1244	32
5/32″	32	.1563	.1157	.1360	1/8″
5/32″	36	.1563	.1202	.1382	30
11/64″	32	.1719	.1313	.1516	9/64″
3/16″	24	.1875	.1334	.1604	26
3/16″	32	.1875	.1469	.1672	22
13/64″	24	.2031	.1490	.1760	20
7/32″	24	.2188	.1646	.1917	16
7/32″	32	.2188	.1782	.1985	12
15/64″	24	.2344	.1806	.2073	10
1/4″	24	.2500	.1959	.2229	4
1/4″	27	.2500	.2019	.2260	3
1/4″	32	.2500	.2094	.2297	7/32″
5/16″	20	.3125	.2476	.2800	17/64″
5/16″	27	.3125	.2644	.2884	J
5/16″	32	.3125	.2719	.2922	9/32″
3/8″	20	.3750	.3100	.3425	21/64″
3/8″	27	.3750	.3269	.3509	R
7/16″	24	.4375	.3834	.4104	X
7/16″	27	.4375	.3894	.4134	Y
1/2″	12	.5000	.3918	.4459	27/64″
1/2″	24	.5000	.4459	.4729	29/64″
1/2″	27	.5000	.4519	.4759	15/32″
9/16″	27	.5625	.5144	.5384	17/32″
5/8″	12	.6250	.5168	.5709	35/64″
5/8″	27	.6250	.5769	.6009	19/32″
11/16″	11	.6875	.5694	.6285	19/32″
11/16″	16	.6875	.6063	.6469	5/8″
3/4″	12	.7500	.6418	.6959	43/64″
3/4″	27	.7500	.7019	.7259	23/32″
13/16″	10	.8125	.6826	.7476	23/32″
7/8″	12	.8750	.7668	.8209	51/64″
7/8″	18**	.8750	.8028	.8389	53/64″
7/8″	27	.8750	.8269	.8509	27/32″
15/16″	9	.9375	.7932	.8654	53/64″
1″	12	1.0000	.8918	.9459	59/64″
1″	27	1.0000	.9519	.9759	31/32″
1 5/8″	5 1/2	1.6250	1.3888	1.5069	1-29/64″
1 7/8″	5	1.8750	1.6152	1.7451	1-11/16″
2 1/8″	4 1/2	2.1250	1.8363	1.9807	1-29/32″
2 3/8″	4	2.3750	2.0502	2.2126	2- 1/8 ″

** *Standard Spark Plug Size*

TABLE IX

MACHINE SCREW SIZES

THREAD DIMENSIONS AND TAP DRILL SIZES
NATIONAL SPECIAL THREAD SERIES

Nominal Size	Threads per Inch	Major Diameter Inches	Minor Diameter Inches	Pitch Diameter Inches	Tap Drill for 75% Thread
1	56	.0730	.0498	.0614	54
4	32	.1120	.0714	.0917	45
4	36	.1120	.0759	.0940	44
5(⅛)	36	.1250	.0889	.1070	40
6	36	.1380	.1019	.1200	34
7	30	.1510	.1077	.1294	31
7	36	.1510	.1149	.1330	⅛″
8	30	.1640	.1207	.1423	30
8	40	.1640	.1315	.1478	28
9	24	.1770	.1229	.1499	29
9	30	.1770	.1337	.1553	27
9	32	.1770	.1364	.1567	26
10	28	.1900	.1436	.1668	23
10	30	.1900	.1467	.1684	22
12	32	.2160	.1754	.1957	13
14	20	.2420	.1770	.2095	10
14	24	.2420	.1879	.2149	7

TABLE X
BRITISH STANDARD — WHITWORTH FORM
THREAD DIMENSIONS AND TAP DRILL SIZES

Nominal Size	Threads per Inch	Major Diameter Inches	Minor Diameter Inches	Pitch Diameter Inches	Tap Drill for Full Thread
1/16″	60	.0625	.0412	.0518	57
3/32″	48	.0938	.0671	.0804	50
1/8″	40	.1250	.0930	.1090	40
5/32″	32	.1563	.1162	.1362	31
3/16″	24	.1875	.1341	.1608	28
7/32″	24	.2188	.1654	.1921	17
1/4″	20	.2500	.1860	.2180	9
9/32″	26	.2813	.2321	.2566	C
5/16″	18	.3125	.2414	.2769	1/4″
3/8″	16	.3750	.2950	.3350	5/16″
7/16″	14	.4375	.3460	.3918	T
1/2″	12	.5000	.3933	.4466	Z
9/16″	12	.5625	.4558	.5091	15/32″
5/8″	11	.6250	.5086	.5668	17/32″
11/16″	11	.6875	.5711	.6293	19/32″
3/4″	10	.7500	.6219	.6860	41/64″
13/16″	10	.8125	.6844	.7485	45/64″
7/8″	9	.8750	.7327	.8039	3/4″
1″	8	1.0000	.8399	.9200	55/64″
1 1/8″	7	1.1250	.9420	1.0335	31/32″
1 1/4″	7	1.2500	1.0670	1.1585	1- 3/32″
1 3/8″	6	1.3750	1.1616	1.2683	1- 3/16″
1 1/2″	6	1.5000	1.2866	1.3933	1- 5/16″
1 5/8″	5	1.6250	1.3689	1.4969	1-13/32″
1 3/4″	5	1.7500	1.4939	1.6219	1-17/32″
2″	4 1/2	2.0000	1.7154	1.8577	1- 3/4 ″
2 1/4″	4	2.2500	1.9298	2.0899	1-31/32″
2 1/2″	4	2.5000	2.1798	2.3399	2- 7/32″

TABLE XI
BRITISH ASSOCIATION STANDARD
THREAD DIMENSIONS AND TAP DRILL SIZES

Number Size	Pitch m/m	Major Diameter m/m	Minor Diameter m/m	Pitch Diameter m/m	Tap Drill for Full Thread
0	1.00	6.0	4.80	5.400	10
1	.90	5.3	4.22	4.760	17
2	.81	4.7	3.73	4.215	24
3	.73	4.1	3.22	3.660	29
4	.66	3.6	2.81	3.205	32
5	.59	3.2	2.49	2.845	37
6	.53	2.8	2.16	2.480	43
7	.48	2.5	1.92	2.210	46
8	.43	2.2	1.68	1.940	50
9	.39	1.9	1.43	1.665	53
10	.35	1.7	1.28	1.490	55
11	.31	1.5	1.13	1.315	56
12	.28	1.3	.96	1.130	60

TABLE XII

INTERNATIONAL STANDARD — METRIC

THREAD DIMENSIONS AND TAP DRILL SIZES

Major Diameter m/m	Pitch m/m	Minor Diameter m/m	Pitch Diameter m/m	Tap Drill for 75% Thread m/m	Tap Drill for 75% Thread No. or Inches
2.0	.40	1.48	1.740	1.6	1/16
2.3	.40	1.78	2.040	1.9	48
2.6	.45	2.02	2.308	2.1	45
3.0	.50	2.35	2.675	2.5	40
3.5	.60	2.72	3.110	2.9	33
4.0	.70	3.09	3.545	3.3	30
4.5	.75	3.53	4.013	3.75	26
5.0	.80	3.96	4.480	4.2	19
5.5	.90	4.33	4.915	4.6	14
6.0	1.00	4.70	5.350	5.0	9
7.0	1.00	5.70	6.350	6.0	15/64"
8.0	1.25	6.38	7.188	6.8	H
9.0	1.25	7.38	8.188	7.8	5/16"
10.0	1.50	8.05	9.026	8.6	R
11.0	1.50	9.05	10.026	9.6	V
12.0	1.75	9.73	10.863	10.5	Z
14.0*	1.25	12.38	13.188	13.0	33/64"
14.0	2.00	11.40	12.701	12.0	15/32"
16.0	2.00	13.40	14.701	14.0	35/64"
18.0*	1.50	16.05	17.026	16.5	41/64"
18.0	2.50	14.75	16.376	15.5	39/64"
20.0	2.50	16.75	18.376	17.5	11/16"
22.0	2.50	18.75	20.376	19.5	49/64"
24.0	3.00	20.10	22.051	21.0	53/64"
27.0	3.00	23.10	25.051	24.0	15/16"
30.0	3.50	25.45	27.727	26.5	1- 3/64"
33.0	3.50	28.45	30.727	29.5	1-11/64"
36.0	4.00	30.80	33.402	32.0	1-17/64"
39.0	4.0	33.80	36.402	35.0	1- 3/8 "
42.0	4.50	36.15	39.077	37.0	1-29/64"
45.0	4.50	39.15	42.077	40.0	1-37/64"
48.0	5.00	41.50	44.752	43.0	1-11/16"

* *Special Spark Plug Sizes*

TABLE XIII

FRENCH STANDARD THREADS — METRIC

THREAD DIMENSIONS AND TAP DRILL SIZES

Major Diameter m/m	Pitch m/m	Minor Diameter m/m	Pitch Diameter m/m	Tap Drill for 75% Thread m/m	Tap Drill for 75% Thread No. or Inches
1.5	.35	1.05	1.273	1.1	57
2.0	.45	1.42	1.708	1.5	53
2.5	.45	1.92	2.208	2.0	47
3.0	.60	2.22	2.610	2.4	3/32″
3.5	.60	2.72	3.110	2.9	33
4.0	.75	3.03	3.513	3.25	30
4.5	.75	3.53	4.013	3.75	26
5.0	.90	3.83	4.415	4.1	20
5.5	.90	4.33	4.915	4.6	14
6.0	1.00	4.70	5.350	5.0	9
7.0	1.00	5.70	6.350	6.0	15/64″
8.0	1.00	6.70	7.350	7.0	I
9.0	1.00	7.70	8.350	8.0	5/16″
10.0	1.50	8.05	9.026	8.6	R
12.0	1.50	10.05	11.026	10.5	Z
14.0	2.00	11.40	12.701	12.0	15/32″
16.0	2.00	13.40	14.701	14.0	35/64″
18.0	2.50	14.75	16.376	15.5	39/64″
20.0	2.50	16.75	18.376	17.5	11/16″
22.0	2.50	18.75	20.376	19.5	49/64″
24.0	3.00	20.10	22.051	21.0	53/64″
26.0	3.00	22.10	24.051	23.0	57/64″
28.0	3.00	24.10	26.051	25.0	63/64″
30.0	3.50	25.45	27.727	26.5	1- 3/64″
32.0	3.50	27.45	29.727	28.5	1- 1/8 ″
34.0	3.50	29.45	31.727	30.5	1-13/64″
36.0	4.00	30.80	33.402	32.0	1-17/64″
38.0	4.00	32.80	35.402	34.0	1-21/64″
40.0	4.00	34.80	37.402	36.0	1-27/64″
42.0	4.50	36.15	39.077	37.0	1-29/64″
44.0	4.50	38.15	41.077	39.0	1-17/32″
46.0	4.50	40.15	43.077	41.0	1-39/64″
48.0	5.00	41.50	44.752	43.0	1-11/16″
50.0	5.00	43.50	46.752	45.0	1-49/64″

TABLE XIV
ACME STANDARD THREAD DIMENSIONS

Threads per Inch	Pitch Inches P	Depth of Thread	Double Depth of Thread	Width of Top of Thread	Width of Space at Bottom of Thread
1	1	.5100	1.0200	.3707	.3655
1⅓	3/4	.3850	.7700	.2780	.2728
2	1/2	.2600	.5200	.1853	.1801
3	1/3	.1767	.3534	.1235	.1183
4	1/4	.1350	.2700	.0927	.0875
5	1/5	.1100	.2200	.0741	.0689
6	1/6	.0933	.1867	.0618	.0566
7	1/7	.0814	.1628	.0530	.0478
8	1/8	.0725	.1450	.0463	.0411
9	1/9	.0655	.1311	.0413	.0361
10	1/10	.0600	.1200	.0371	.0319

Note: Minor Diameter equals Major Diameter minus Double Depth of Thread.

TABLE XV
SQUARE THREAD DIMENSIONS

Threads per Inch	Pitch Inches P	Depth of Thread	Double Depth of Thread	Width of Top of Thread	Width of Space at Bottom of Thread
1	1.0000	.5000	1.0000	.5000	.5000
1⅓	.7500	.3750	.7500	.3750	.3750
1½	.6667	.3333	.6667	.3333	.3333
1¾	.5714	.2857	.5714	.2857	.2857
2	.5000	.2500	.5000	.2500	.2500
2½	.4000	.2000	.4000	.2000	.2000
3	.3333	.1667	.3333	.1667	.1667
3½	.2857	.1429	.2857	.1429	.1429
4	.2500	.1250	.2500	.1250	.1250
4½	.2222	.1111	.2222	.1111	.1111
5	.2000	.1000	.2000	.1000	.1000
5½	.1818	.0909	.1818	.0909	.0909
6	.1667	.0833	.1667	.0833	.0833
7	.1429	.0714	.1429	.0714	.0714
8	.1250	.0625	.1250	.0625	.0625
9	.1111	.0556	.1111	.0556	.0556
10	.1000	.0500	.1000	.0500	.0500
11	.0909	.0455	.0909	.0455	.0455
12	.0833	.0417	.0833	.0417	.0417
13	.0769	.0385	.0769	.0385	.0385
14	.0714	.0357	.0714	.0357	.0357
15	.0667	.0333	.0667	.0333	.0333
16	.0625	.0312	.0625	.0312	.0312
18	.0556	.0278	.0556	.0278	.0278
20	.0500	.0250	.0500	.0250	.0250
22	.0455	.0227	.0455	.0227	.0227
24	.0417	.0208	.0417	.0208	.0208

TABLE XVI

STRAIGHT PIPE THREADS
AMERICAN STANDARD FORM

THREAD DIMENSIONS AND TAP DRILL SIZES

Nominal Pipe Size	Threads per Inch	Major Diameter Inches	Minor Diameter Inches	Pitch Diameter Inches	Tap Drill for Full Thread
1/8"	27	.4044	.3451	.3748	11/32"
1/4"	18	.5343	.4455	.4899	7/16"
3/8"	18	.6714	.5826	.6270	37/64"
1/2"	14	.8356	.7213	.7784	23/32"
3/4"	14	1.0460	.9318	.9889	59/64"
1"	11 1/2	1.3082	1.1690	1.2386	1- 5/32"
1 1/4"	11 1/2	1.6530	1.5138	1.5834	1- 1/2 "
1 1/2"	11 1/2	1.8919	1.7527	1.8223	1-47/64"
2"	11 1/2	2.3658	2.2267	2.2963	2- 7/32"
2 1/2"	8	2.8622	2.6622	2.7622	2- 5/8 "
3"	8	3.4885	3.2885	3.3885	3- 1/4 "
3 1/2"	8	3.9888	3.7888	3.8888	3- 3/4 "
4"	8	4.4871	4.2871	4.3871	4- 1/4 "

TABLE XVII

STOVE BOLTS

MANUFACTURERS STANDARD FORM—60° THREAD
THREAD DIMENSIONS AND TAP DRILL SIZES

Nominal Size	Threads per Inch	Major Diameter Inches	Minor Diameter Inches	Pitch Diameter Inches	Tap Drill
1/8"	32	.1250	.0910	.1080	42
5/32"	28	.1630	.1250	.1440	1/8"
3/16"	24	.1950	.1510	.1730	24
7/32"	22	.2220	.1740	.1980	16
1/4"	18	.2500	.1980	.2240	8
5/16"	18	.3125	.2403	.2764	C
3/8"	16	.3750	.2938	.3344	M
7/16"	14	.4375	.3447	.3911	S
1/2"	13	.5000	.4000	.4500	Y

TABLE XVIII—GEAR SET-UPS TO OBTAIN PROPER CARRIAGE FEEDS FOR WINDING WITH AMERICAN STEEL AND WIRE MUSIC WIRE GAUGE

The American S & W Gauge is universal for denoting sizes of music wire used in making small springs.

A. S. & W. Gauge No.	Wire Diameter	Screw	Position C		Position B		Position A		Note
			B	F	B	F	B	F	
6/0	.004	96F	96	20	—	—	24	52	
5/0	.005	96F	—	—	64	20	20	52	c
4/0	.006	96F	—	—	64	20	24	52	
3/0	.007	96F	44	20	56I	xxS	20	54	c*
2/0	.008	96F	48	20	54I	xxS	24	52	*
0	.009	96F	52	20	48I	xxS	36	64	*
1	.010	96F	—	—	52	20	40	64	
2	.011	96F	—	—	64	20	44	52	
3	.012	96F	—	—	64	24	40	52	
4	.013	96F	—	—	64	20	64I	32S	
5	.014	96F	44	20	56I	xxS	40	54	*
6	.016	96F	—	—	52	20	64I	32S	
7	.018	96F	40	24	64I	xxS	46	64	*
8	.020	96F	—	—	96	46	—	—	
9	.022	64F	—	—	32	20			
					52I	xxS	36	64	*
10	.024	64F	—	—	52	20	64I	24S	
11	.026	96F	—	—	32	20	64I	32S	
12	.029	96F	—	—	46	32	64I	32S	
13	.031	56F	46	20	—	—	96I	32S	
14	.033	56F	52	24	—	—	96I	32S	
15	.035	52F	44	20	—	—	96I	32S	
16	.037	54F	—	—	20S	64I	64	32	
17	.039	56F	44	24	—	—	96I	32S	
18	.041	64F	48	36	52I	20S	56	64	*
19	.043	64F	—	—	20S	54I	64	44	
20	.045	52F	44	40	54I	20S	36	56	*
21	.047	52F	40	20	44	36	32S	64I	*
22	.049	44F	32	24	56I	20S	46	64	*
23	.051	56F	52	44	48I	20S	54	64	*
24	.055	54F	40	32	48I	20S	52	56	*
25	.059	48F	40	32	52I	20S	46	52	*
26	.063	56F	44	46	52I	20S	54	64	*
27	.067	56F	36	54	64I	32S	64	40	*
28	.071	54F	—	—	48	46	64I	20S	
29	.075	48F	—	—	40	36	64I	20S	
30	.080	40F	20	36	64I	xxS	24	54	*
31	.085	40F	46	44	52I	20S	48	54	*
32	.090	40F	20	36	64I	24S	32	64	*
33	.095	44F	48	54	46I	20S	52	56	*
34	.100	40F	—	—	—	—	20S	96I	

SYMBOLS:

c—extra 20 tooth gear
xx—spacer made by turning down a 20 tooth gear to an outside diameter of 1-1/16".
F—position away from headstock
B—position toward headstock
I—idler gear (page 98)
S—spacer gear (page 98)
*—extra sleeve, bushing and bolt assembly.

TABLE XIX—GEAR SET-UPS TO OBTAIN PROPER CARRIAGE FEED FOR WINDING WITH ENAMEL COVERED MAGNET WIRE

Accurate to Commercial Tolerances.

B. & S. Gauge No.	Wire Diameter	Screw Position C	B	F	Position B B	Position B F	Position A B	Position A F	Note
12	.0828	54F	—	—	36	40	64I	20S	
13	.0740	64F	—	—	44	52	64I	20S	
14	.0660	56F	—	—	52	48	64I	20S	
15	.0588	56F	—	—	44	36	64I	20S	
16	.0534	64F	—	—	54	46	64I	32S	
17	.0468	64F	—	—	48	36	64I	20S	
18	.0417	48F	—	—	20S	64I	64	32	
19	.0368	64F	—	—	—	—	96	56	
20	.0333	96F	—	—	40	32	64I	20S	
21	.0298	56F	48	20	—	—	96I	32S	
22	.0266	56F	54	20	—	—	96I	32S	
23	.0237	96F	—	—	36	24	46	54	
24	.0212	96F	—	—	40	24	44	52	
25	.0189	96F	—	—	44	20	64I	32S	
26	.0169	64F	44	20	52I	24S	32	54	*
27	.0152	96F	—	—	48	20	56	64	
28	.0135	96F	—	—	54	20	56	64	
29	.0122	96F	—	—	54	20	44	56	
30	.0108	96F	46	20	56I	xxS	32	54	*
31	.0097	96F	—	—	54	20	40	64	
32	.0087	96F	—	—	96	20	—	—	
33	.0077	96F	54	20	52I	xxS	32	64	*
34	.0069	96F	—	—	56	20	24	52	
35	.0061	96F	—	—	64	20	24	52	
36	.0055	96F	96	20	—	—	40	64	
37	.0049	96F	—	—	64	20	24	64	
38	.0043	96F	96	20	—	—	32	64	
39	.0038	96F	96	20	—	—	24	56	
40	.0034	96F	96	20	—	—	20	52	c

SYMBOLS:

c—extra 20 tooth gear

xx—spacer made by turning down a 20 tooth gear to an outside diameter of 1-1/16".

F—position away from headstock

B—position toward headstock

I—idler gear (page 98)

S—spacer gear (page 98)

*—extra sleeve, bushing and bolt assembly.

TABLE XX—GEAR SET-UPS TO OBTAIN PROPER CARRIAGE FEEDS FOR WINDING WITH AMERICAN OR BROWN AND SHARPE WIRE GAUGE

This gauge is universal for denoting sizes of copper, brass, bronze and aluminum wire, small brass tubing, sheet and strip brass and copper, nickel silver wire and strip, heating alloy wire, and armature binding wire. The table below includes bare wire only.

B. & S. Gauge No.	Wire Diameter	Screw	Position C		Position B		Position A		Note
			B	F	B	F	B	F	
12	.080808	54F	—	—	44	48	64I	20S	
13	.071961	64F	—	—	40	46	64I	20S	
14	.064084	52F	—	—	48	40	64I	20S	
15	.057068	54F	—	—	52	40	64I	20S	
16	.050820	64F	—	—	20S	54I	64	52	
17	.045257	64F	—	—	56	44	48	52	
18	.040303	64F	—	—	46	32	52	56	
19	.035890	54F	46	24	52	56	20S	64I	*
20	.031961	64F	44	36	54I	20S	40	64	*
21	.028462	54F	52	20	—	—	96I	32S	
22	.025347	54F	46	20	52I	24S	44	56	*
23	.022571	96F	—	—	—	—	96	52	
24	.020100	96F	—	—	56	32	54	64	
25	.017900	96F	—	—	56	24	64I	32S	
26	.015940	96F	—	—	44	20	54	64	
27	.014195	48F	44	20	64I	xxS	24	64	*
28	.012641	96F	—	—	44	20	36	54	
29	.011257	96F	—	—	64	24	46	64	
30	.010025	96F	—	—	52	20	40	64	
31	.008928	96F	96	24	—	—	48	56	
32	.007950	96F	96	24	—	—	40	52	
33	.007080	96F	96	20	—	—	44	54	
34	.006304	96F	96	20	—	—	46	64	
35	.005614	96F	96	24	—	—	52	96	e
36	.005000	96F	—	—	64	20	20	52	c
37	.004453	96F	96	24	—	—	24	56	f
38	.003965	96F	96	20	—	—	44	96	e
39	.003531	96F	96	24	—	—	32	96	e
40	.003144	96F	96	20	—	—	20	56	c

SYMBOLS:

c—extra 20 tooth gear
e—extra 96 tooth gear
f—extra 24 tooth gear
*—extra sleeve, bushing and bolt assembly.

F—position away from headstock
B—position toward headstock
I—idler gear (page 98)
S—spacer gear (page 98)

xx—spacer made by turning down a 20 tooth gear to an outside diameter of 1-1/16 inch.

TABLE XXI—GEAR SET-UPS TO OBTAIN PROPER CARRIAGE FEEDS FOR WINDING WITH WASHBURN & MOEN OR STEEL WIRE GAUGE

This gauge applies to practically all types of iron and steel wire except steel music wire. Galvanized iron wire, stove pipe and soft iron wire, binding wire, and steel wire for springs (except music wire) are specified in this gauge.

W. & M. Gauge No.	Wire Diameter	Screw	Position C		Position B		Position A		Note
			B	F	B	F	B	F	
12	.1055	64F	—	—	32	54	64I	20S	
13	.0915	48F	—	—	40	44	64I	20S	
14	.0800	40F	20	36	64I	xxS	24	54	*
15	.0720	36F	54	40	46I	20S	56	64	*
16	.0625	64F	—	—	—	—	32S	96I	
17	.0540	54F	48	40	52I	20S	56	64	*
18	.0475	56F	—	—	54	36	64I	20S	
19	.0410	64F	48	36	52I	20S	56	64	*
20	.0348	64F	—	—	36	20	64I	32S	
21	.0317	56F	54	24	—	—	96I	32S	
22	.0286	96F	—	—	20S	46I	64	44	
23	.0258	46F	40	32	64I	24S	20	54	*
24	.0230	64F	46	20	48I	24S	44	52	*
25	.0204	64F	46	24	56I	20S	40	64	*
26	.0181	96F	—	—	46	20	64I	32S	
27	.0173	96F	—	—	96	40	—	—	
28	.0162	96F	54	24	—	—	56	64	
29	.0150	52F	44	20	54I	xxS	24	56	*
30	.0140	96F	44	20	56I	xxS	40	54	*
31	.0132	64F	54	20	46I	xxS	32	56	*
32	.0128	96F	—	—	52	24	36	54	
33	.0118	96F	44	20	56I	24S	40	64	*
34	.0104	96F	—	—	96	24	—	—	
35	.0095	96F	—	—	52	20	32	54	
36	.0090	96F	52	20	48I	xxS	36	64	*
37	.0085	96F	44	20	56I	xxS	24	54	*
38	.0080	96F	48	20	54I	xxS	24	52	*
39	.0075	96F	56	20	52I	xxS	32	64	*
40	.0070	96F	44	20	56I	xxS	20	54	c*

SYMBOLS:

c—extra 20 tooth gear

*—extra sleeve, bushing and bolt assembly

xx—spacer made by turning down a 20 tooth gear to an outside diameter of 1-1/16 inch.

F—position away from headstock

B—position toward headstock

I—idler gear (page 98)

S—spacer gear (page 98)

TABLE XXII—GEAR SET-UPS TO OBTAIN PROPER CARRIAGE FEEDS FOR WINDING WITH DOUBLE COTTON COVERED MAGNET WIRE

Accurate to Commercial Tolerances.

B. & S. Gauge No.	Wire Diameter	Screw	Position C		Position B		Position A		Note
			B	F	B	F	B	F	
12	.0908	54F	—	—	36	44	64I	20S	
13	.0810	54F	—	—	44	48	64I	20S	
14	.0731	64F	—	—	48	56	64I	20S	
15	.0661	56F	—	—	52	48	64I	20S	
16	.0598	64F	—	—	46	44	64I	20S	
17	.0543	40F	xxS	64I	—	—	96	52	
18	.0493	44F	xxS	64I	—	—	96	52	
19	.0444	54F	40	24	—	—	96I	32S	
20	.0410	44F	40	32	56I	20S	36	64	*
21	.0365	64F	—	—	—	—	96	56	
22	.0334	96F	—	—	40	32	64I	20S	
23	.0306	96F	—	—	44	32	64I	32S	
24	.0281	52F	44	32	56I	xxS	32	64	*
25	.0259	46F	40	32	64I	24S	20	54	*
26	.0239	96F	—	—	56	32	64I	20S	
27	.0222	54F	40	24	64I	20S	32	64	*
28	.0206	48F	36	20	64I	xxS	24	54	*
29	.0193	96F	—	—	52	24	64I	32S	
30	.0180	96F	40	24	64I	xxS	46	64	*
31	.0169	54F	44	20	56I	xxS	32	64	*
32	.0160	96F	—	—	52	20	64I	32S	
33	.0151	64F	—	—	64	24	36	56	
34	.0143	54F	52	20	56I	xxS	32	64	*
35	.0136	64F	46	20	56I	xxS	32	64	*
36	.0130	96F	—	—	64	20	64I	32S	
37	.0125	96F	—	—	48	20	46	64	
38	.0120	96F	—	—	48	20	44	64	
39	.0115	96F	—	—	52	20	40	56	
40	.0112	64F	48	20	54I	xxS	24	56	*

SYMBOLS:

*—extra sleeve, bushing and bolt assembly

xx—spacer made by turning down a 20 tooth gear to an outside diameter of 1-1/16 inch

F—position away from headstock

B—position toward headstock

I—idler gear (page 98)

S—spacer gear (page 98)

TABLE XXIII—GEAR SET-UPS TO OBTAIN PROPER CARRIAGE FEEDS FOR WINDING WITH SINGLE COTTON COVERED MAGNET WIRE

Accurate to Commercial Tolerances.

B. & S. Gauge No.	Wire Diameter	Screw	Position C		Position B		Position A		Note
			B	F	B	F	B	F	
12	.0858	56F	—	—	40	48	64I	20S	
13	.0765	64F	—	—	36	44	64I	32S	
14	.0686	56F	—	—	48	46	64I	20S	
15	.0616	52F	40	32	—	—	96I	32S	
16	.0553	64F	—	—	52	46	64I	20S	
17	.0498	56F	—	—	46	32	64I	20S	
18	.0448	54F	40	24	—	—	96I	32S	
19	.0399	96F	—	—	46	44	64I	32S	
20	.0365	64F	—	—	—	—	96	56	
21	.0325	56F	44	20	—	—	96I	32S	
22	.0294	44F	40	36	64I	xxS	20	56	*
23	.0266	56F	54	20	—	—	96I	32S	
24	.0241	64F	—	—	52	20	64I	24S	
25	.0219	96F	—	—	46	24	64I	32S	
26	.0199	96F	—	—	96	46	—	—	
27	.0182	96F	—	—	46	20	64I	32S	
28	.0166	64F	—	—	52	20	44	64	
29	.0153	64F	46	20	54I	xxS	36	64	*
30	.0140	96F	—	—	96	32	—	—	
31	.0129	96F	—	—	64	20	64I	32S	
32	.0120	96F	—	—	48	20	44	64	
33	.0111	96F	—	—	54	20	46	64	
34	.0103	64F	52	20	54I	xxS	24	56	*
35	.0096	96F	52	24	52I	xxS	32	64	b*
36	.0090	96F	52	20	48I	xxS	36	64	*
37	.0085	96F	44	20	56I	xxS	24	54	*
38	.0080	96F	52	20	54I	xxS	32	64	*
39	.0075	96F	56	20	52I	xxS	32	64	*
40	.0071	96F	52	20	52I	xxS	24	54	b*

SYMBOLS:

b—extra 52 tooth gear

*—extra sleeve, bushing and bolt assembly

xx—spacer made by turning down a 20 tooth gear to an outside diameter of 1-1/16 inch

F—position away from headstock

B—position toward headstock

I—idler gear (page 98)

S—spacer gear (page 98)

TABLE XXIV—GEAR SET-UPS TO OBTAIN PROPER CARRIAGE FEEDS FOR WINDING WITH DOUBLE SILK COVERED MAGNET WIRE

Accurate to Commercial Tolerances.

B. & S. Gauge No.	Wire Diameter	Screw	Position C		Position B		Position A		Note
			B	F	B	F	B	F	
12	.0848	56F	—	—	54	64	64I	20S	
13	.0760	48F	—	—	44	40	64I	20S	
14	.0681	54F	—	—	48	44	64I	20S	
15	.0611	56F	—	—	54	46	64I	20S	
16	.0548	64F	—	—	20S	52I	64	56	
17	.0493	44F	xxS	64I	—	—	96	52	
18	.0443	54F	40	24	—	—	96I	32S	
19	.0394	64F	—	—	20S	54I	64	40	
20	.0360	56F	—	—	20S	64I	64	32	
21	.0325	56F	44	20	—	—	96I	32S	
22	.0284	48F	44	24	54I	20S	40	64	*
23	.0266	56F	54	20	—	—	96I	32S	
24	.0241	64F	—	—	52	20	64I	24S	
25	.0219	96F	—	—	46	24	64I	32S	
26	.0199	96F	—	—	96	46	—	—	
27	.0182	96F	—	—	46	20	64I	32S	
28	.0166	64F	—	—	52	20	44	64	
29	.0153	64F	46	20	54I	xxS	36	64	*
30	.0140	96F	—	—	96	32	—	—	
31	.0129	96F	—	—	64	20	64I	32S	
32	.0120	96F	—	—	48	20	44	64	
33	.0111	96F	—	—	54	20	46	64	
34	.0103	64F	52	20	54I	xxS	24	56	*
35	.0096	96F	52	24	52I	xxS	32	64	b*
36	.0090	96F	52	20	48I	xxS	36	64	*
37	.0085	96F	44	20	56I	xxS	24	54	*
38	.0080	96F	52	20	54I	xxS	32	64	*
39	.0075	96F	56	20	52I	xxS	32	64	*
40	.0071	96F	52	20	52I	xxS	24	54	b*

SYMBOLS:

b—extra 52 tooth gear.

*—extra sleeve, bushing and bolt assembly

xx—spacer made by turning down a 20 tooth gear to an outside diameter of 1-1/16 inch

F—position away from headstock

B—position toward headstock

I—idler gear (page 98)

S—spacer gear (page 98)

TABLE XXV—GEAR SET-UPS TO OBTAIN PROPER CARRIAGE FEEDS FOR WINDING WITH SINGLE SILK COVERED MAGNET WIRE

Accurate to Commercial Tolerances.

B. & S. Gauge No.	Wire Diameter	Screw	Position C		Position B		Position A		Note
			B	F	B	F	B	F	
12	.0828	54F	—	—	36	40	64I	20S	
13	.0740	64F	—	—	44	52	64I	20S	
14	.0661	56F	—	—	52	48	64I	20S	
15	.0591	48F	44	24	52	40	20S	64I	*
16	.0528	64F	—	—	20S	52I	64	54	
17	.0473	46F	xxS	64I	—	—	96	52	
18	.0423	56F	—	—	54	32	64I	20S	
19	.0374	56F	46	24	—	—	96I	32S	
20	.0340	96F	—	—	20S	40I	54	44	
21	.0305	96F	—	—	44	32	64I	32S	
22	.0274	56F	52	20	—	—	96I	32S	
23	.0246	96F	—	—	20S	48I	54	32	
24	.0221	52F	54	24	48I	20S	36	56	*
25	.0199	96F	—	—	96	46	—	—	
26	.0179	96F	—	—	56	24	64I	32S	
27	.0162	96F	54	24	—	—	56	64	
28	.0146	96F	—	—	54	24	44	56	
29	.0133	64F	54	20	46I	xxS	32	56	*
30	.0120	96F	—	—	48	20	44	64	
31	.0109	96F	48	20	54I	24S	40	64	*
32	.0100	96F	—	—	52	20	40	64	
33	.0091	96F	96	24	—	—	56	64	
34	.0083	96F	46	20	54I	xxS	24	52	*
35	.0076	96F	96	20	—	—	56	64	
36	.0070	96F	96	24	—	—	36	54	
37	.0065	96F	96	24	—	—	40	64	
38	.0060	96F	96	24	—	—	32	56	
39	.0055	96F	96	20	—	—	40	64	
40	.0051	96F	96	20	—	—	32	54	

SYMBOLS:

*—extra sleeve, bushing and bolt assembly

xx—spacer made by turning down a 20 tooth gear to an outside diameter of 1-1/16 inch

F—position away from headstock

B—position toward headstock

I—idler gear (page 98)

S—spacer gear (page 98)

TABLE XXVI—GEAR SET-UPS TO OBTAIN PROPER CARRIAGE FEEDS FOR WINDING WITH ENAMEL AND SINGLE COTTON COVERED MAGNET WIRE

Accurate to Commercial Tolerances.

B. & S. Gauge No.	Wire Diameter	Screw	Position C		Position B		Position A		Note
			B	F	B	F	B	F	
12	.0878	56F	—	—	44	54	64I	20S	
13	.0785	56F	—	—	40	44	64I	20S	
14	.0705	52F	—	—	48	44	64I	20S	
15	.0633	46F	44	32	—	—	96I	32S	
16	.0569	64F	—	—	44	40	64I	20S	
17	.0513	54F	—	—	52	36	64I	20S	
18	.0462	52F	40	24	—	—	96I	32S	
19	.0413	54F	36	20	—	—	96I	32S	
20	.0378	48F	44	20	—	—	96I	32S	
21	.0338	54F	44	20	—	—	96I	32S	
22	.0306	96F	—	—	44	32	64I	32S	
23	.0277	96F	—	—	—	—	96	64	
24	.0252	96F	—	—	40	24	64I	20S	
25	.0229	96F	—	—	44	24	64I	32S	
26	.0209	96F	—	—	96	48	—	—	
27	.0192	96F	—	—	52	24	64I	32S	
28	.0175	96F	—	—	96	40	—	—	
29	.0162	96F	54	24	—	—	56	64	
30	.0148	96F	—	—	56	20	64I	32S	
31	.0137	64F	46	20	56I	xxS	32	64	*
32	.0127	96F	64	24	—	—	52	64	
33	.0117	96F	—	—	46	20	36	56	
34	.0109	96F	48	20	54I	24S	40	64	*
35	.0101	96F	—	—	52	20	40	64	
36	.0095	96F	—	—	52	20	32	54	
37	.0089	96F	96	24	—	—	46	54	
38	.0084	96F	44	20	56I	xxS	24	54	*
39	.0078	96F	54	20	52I	xxS	32	64	*
40	.0074	96F	56	20	52I	xxS	32	64	*

SYMBOLS:

*—extra sleeve, bushing and bolt assembly

xx—spacer made by turning down a 20 tooth gear to an outside diameter of 1-1/16 inch

F—position away from headstock

B—position toward headstock

I—idler gear (page 98)

S—spacer gear (page 98)

TABLE XXVII—GEAR SET-UPS TO OBTAIN PROPER CARRIAGE FEEDS FOR WINDING WITH ENAMEL AND SINGLE SILK COVERED MAGNET WIRE

Accurate to Commercial Tolerances.

B. & S. Gauge No.	Wire Diameter	Screw	Position C		Position B		Position A		Note
			B	F	B	F	B	F	
12	.0848	56F	—	—	54	64	64I	20S	
13	.0760	48F	—	—	44	40	64I	20S	
14	.0680	54F	—	—	48	44	64I	20S	
15	.0608	54F	—	—	44	36	64I	20S	
16	.0544	64F	—	—	46	40	64I	20S	
17	.0488	48F	20S	64I	—	—	56	96	
18	.0437	96F	—	—	44	46	64I	32S	
19	.0388	56F	xxS	64I	—	—	96	52	
20	.0353	64F	—	—	20S	54I	64	36	
21	.0318	56F	54	24	—	—	96I	32S	
22	.0286	54F	52	20	—	—	96I	32S	
23	.0257	96F	—	—	52	32	64I	32S	
24	.0232	64F	—	—	54	20	64I	32S	
25	.0209	96F	—	—	96	48	—	—	
26	.0189	96F	—	—	44	20	64I	32S	
27	.0172	64F	—	—	52	20	40	56	
28	.0155	96F	—	—	54	20	64I	32S	
29	.0142	54F	52	20	56I	xxS	32	64	*
30	.0128	96F	—	—	52	24	36	54	
31	.0117	96F	—	—	46	20	36	56	
32	.0107	96F	46	20	56I	xxS	32	54	*
33	.0097	96F	—	—	54	20	40	64	
34	.0089	96F	96	24	—	—	46	54	
35	.0081	96F	52	20	54I	xxS	32	64	*
36	.0075	96F	56	20	52I	xxS	32	64	*
37	.0069	96F	—	—	56	20	24	52	
38	.0064	96F	96	24	—	—	32	52	
39	.0058	96F	96	20	—	—	36	54	
40	.0054	96F	96	20	—	—	40	64	

SYMBOLS:

*—extra sleeve, bushing and bolt assembly

xx—spacer made by turning down a 20 tooth gear to an outside diameter of 1-1/16 inch.

F—position away from headstock

B—position toward headstock

I—idler gear (page 98)

S—spacer gear (page 98)

FORMULA FOR CALCULATING GEAR TRAIN SET-UPS FOR ODD THREADS AND FEEDS — ATLAS LATHE ONLY

First refer to threading chart, page 97, and Table III, pages 132 and 133. If thread or feed is not listed, use the following method to determine proper gears:

(1) Assume that a gear is placed on the lead screw stub and calculate the Lead Screw Constant for that gear. The Lead Screw Constant is equal to:

$$\frac{\text{Teeth in Gear on Lead Screw Stub}}{32\ (\text{Teeth in Atlas Spindle Gear})} \times 8\ (\text{Number of Threads on Atlas Lead Screw})$$

When calculating gear ratios for a fine thread or feed, the gear on the lead screw stub is assumed to be large (96, 64, etc.)—when calculating gear ratios for a coarse thread or feed, the gear on the lead screw stub is assumed to be small (36, 32, etc.)

(2) Form a fraction — $\frac{\text{Lead Screw Constant}}{\text{No. of threads per inch to be cut}}$

(3) Factor the numerator and denominator of the fraction (i. e. choose 2 numbers which multiplied together give a number equal to the numerator or denominator).

(4) Multiply vertical factors by the same number until each of the four resulting figures is equal to the number of teeth on one of the Atlas change gears. The 16 standard Atlas change gears furnished have the following number of teeth: 20, 24, 32 (2 gears), 36, 40, 44, 46, 48, 52, 54, 56, 64 (2 gears), and 96 (2 gears).

(5) The 2 resulting figures in the numerator are driving gears; the 2 resulting figures in the denominator are the driven gears.

Note: If above calculations do not result in figures which are all equal to the number of teeth in standard Atlas change gears, repeat calculations with a different set of factors for the fraction. If calculations with all possible factors do not result in figures which are equal to the number of teeth in Atlas change gears, assume that a different gear is placed on the lead screw stub and repeat calculations.

EXAMPLE: To determine gear set-up necessary to cut 88 threads per inch.

(1) Form the proper fraction. Since 88 is a fine thread, a 96 tooth gear is assumed to be placed on the lead screw stub, and the proper Lead Screw Constant becomes $\frac{96}{32} \times 8 = 24$. The proper fraction for 88 threads per inch is $-\frac{24}{88}$

(2) Factor the fraction:

$$\frac{24}{88} = \frac{4 \times 6}{8 \times 11}$$

(3) Multiply vertical factors by the same number until each of the 4 resulting figures is equal to the number of teeth on a standard Atlas change gear:

$$\frac{(4 \times 8) \times (6 \times 4)}{(8 \times 8) \times (11 \times 4)} = \frac{32 \times 24}{64 \times 44}$$

(4) The 32 tooth gear and the 24 tooth gear are the driving gears; the 64 tooth gear and the 44 tooth gear are the driven gears.

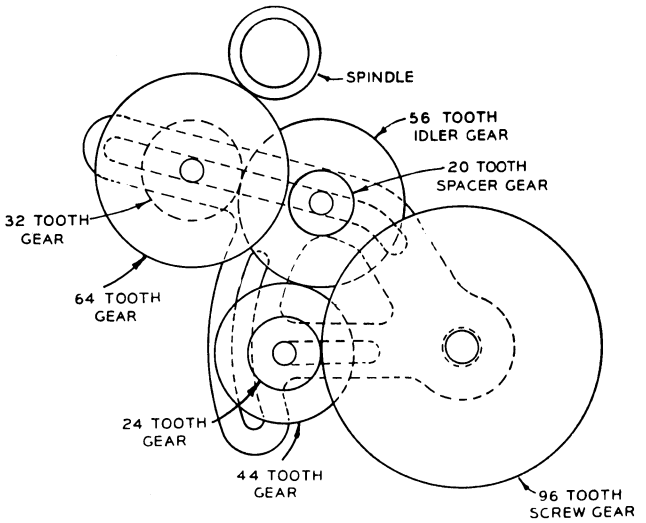

Gear set-up for 88 threads per inch.

The proper gear train to cut 88 threads per inch is made in the following manner (see figure above).

(1) Place a 96 tooth gear on front position of screw stub (paragraph 1, Example, page 155).

(2) Place a 24 tooth gear and 44 tooth gear on sleeve in Position C with 24 tooth gear in front position. Tighten so that 24 tooth gear meshes with 96 tooth gear in screw position.

(3) Place 56 tooth gear and 20 tooth gear on sleeve in Position B with 56 tooth gear in back position. Tighten so that 56 tooth gear meshes with 44 tooth gear in Position C. The 56 tooth gear is an idler; the 20 tooth gear is a spacer.

(4) Place a 32 tooth gear and 64 tooth gear on sleeve in Position A with 64 tooth gear in front position. Tighten so that 32 tooth gear meshes with 56 tooth gear in Position B.

(5) Swing entire gear bracket upward and tighten so that 64 tooth gear in Position A meshes with spindle gear.

An idler gear (page 98) is often necessary to make the gear train mesh properly. The idler gear has no effect on the gear ratios.

Note: If these calculations had not resulted in figures which were all equal to the number of teeth in standard Atlas change gears, the calculations would be repeated with the changes explained in "Note," page 155.

Further experimenting may be necessary in determining which gear to use as an idler—there are no definite rules in this connection.

Carriage feeds are also calculated with this formula after converting feed in inches into the equivalent number of threads per inch:

$$\text{No. of Threads per Inch} = \frac{1}{\text{Feed in Inches}}$$

Part 8

LATHE ATTACHMENTS
AND THEIR USES

PART 8

LATHE ATTACHMENTS AND THEIR USES

Lathe attachments fall into two general classes: (1) Those which increase speed and accuracy of general lathe operations. (2) Those which equip the lathe to handle such work as milling, grinding, undercutting, etc., which usually requires a single purpose machine. The 26 illustrations on page XIII (Foreword) shows how the well equipped Atlas Lathe performs almost every important machining operation. Attachments for holding the work are described in Part 5.

THE STEADY REST

The steady rest (Fig. 180) supports long work during turning, boring or threading operations. The base clamps securely to the bed ways — the adjustable bronze jaws form a bearing for the work and hold it in exact position. The most common methods of mounting work in the steady rest are shown in Figures 181 and 182.

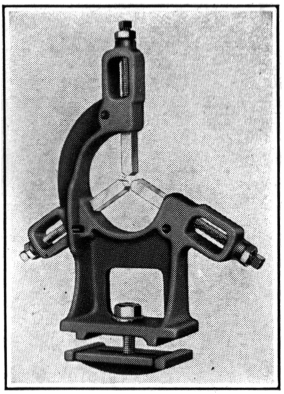

FIG. 180
Steady Rest, or Center Rest.

If the bar is less than ¾ inch in diameter and must be machined near the center or more than 5 or 6 inches from the chuck, the steady rest should be mounted in position near the portion of the work being machined (Fig. 181). To drill, bore, tap or machine the end of a long piece of any diameter up to 3 inches, support the end with the steady rest as shown in Figure 182. The headstock end can be held in a chuck or centered and bound to the face plate (Fig. 183).

MOUNTING WORK IN THE STEADY REST

Accurate positioning of the jaws is essential when mounting work in the steady rest. The bronze jaws must form a true bearing for the work, allowing it to turn freely but without play. The following method is satisfactory for mounting most work: Clean the bed ways. With the work mounted in the lathe, slide the steady rest close to the chuck jaws or lathe dog, tighten the base

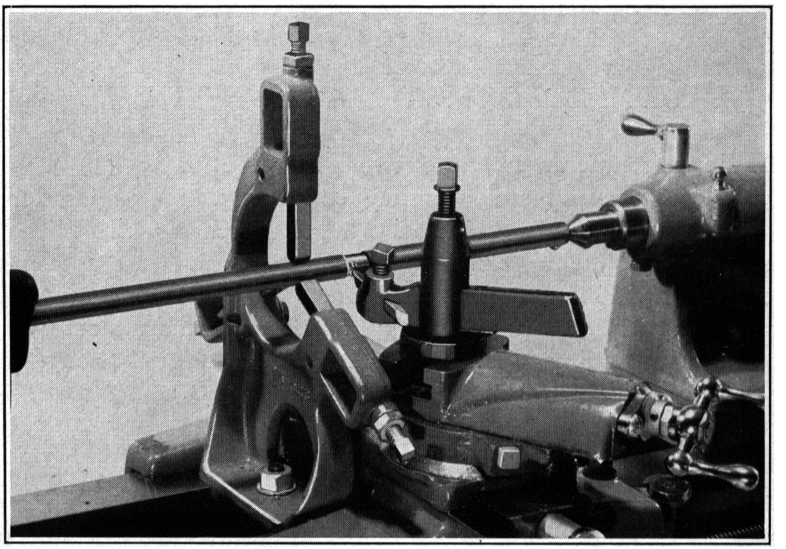

FIG. 181. Steady rest supporting the center portion of a long, small-diameter bar.

clamp, adjust steady rest jaws and lock them in position on the work. A small piece of cellophane slipped between the jaw and the work is sometimes used to aid in obtaining the proper bearing —advance the jaw until it just touches, then remove cellophane. After tightening both the lock nut and clamp screw on each jaw, loosen the base clamp, slide the steady rest into the proper position and retighten base clamp.

When the work is being held in a chuck, the jaws of the steady rest can be set more accurately if the work is held between lathe centers while the jaws are being adjusted. Take extreme care in

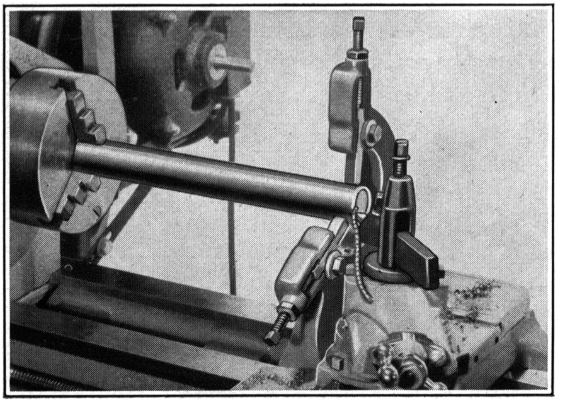

FIG. 182
Steady rest supporting the end of long work.

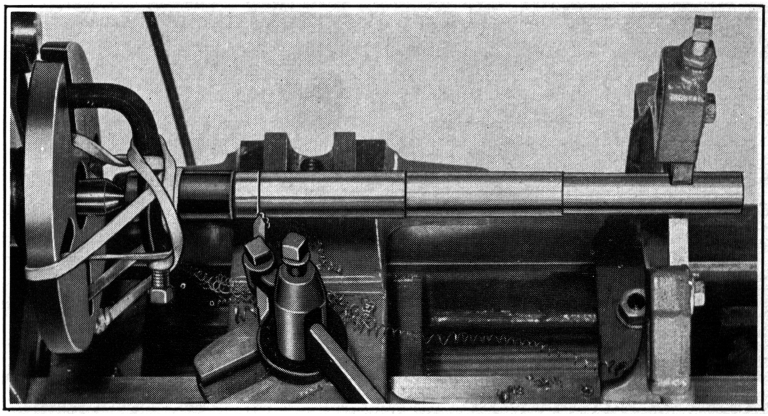

FIG. 183. One end of this piece is being supported by the steady rest; the other is bound to the face plate with a leather thong.

locating the tailstock center (see page 69). For jobs requiring maximum accuracy, check trueness of the work with a dial gauge as shown in Figure 75, page 71.

During the cutting operation apply plenty of lubricant on the work at the point of bearing with the jaws. When using the steady rest in duplicate work, stock is removed or mounted by loosening and resetting the top jaw only.

THE FOLLOWER REST

The follower rest (Fig. 184) is mounted on the back of the carriage dovetail slide and provides support for long slender work mounted between centers. Figure 185 shows a typical application. The two adjustable jaws hold the work in exact position, preventing it from springing away from the tool.

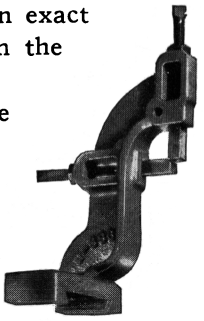

FIG. 184
Follower Rest.

The jaws of the follower rest, like those of the steady rest, must form a true bearing for the work, allowing it to turn with no trace of binding. In setting the follower rest jaws, first remove the guard over the cross feed screw — place a small piece of paper or cardboard over this screw to keep off chips during the cutting operation. The dovetail ways should be wiped clean. Adjust the jaws with the carriage close to the tailstock after a short portion of the work has been turned down at one end. Set the follower rest so that the vertical jaw touches the top of the work. In tightening the follower rest jaws, cellophane may be used to determine the proper amount of friction,

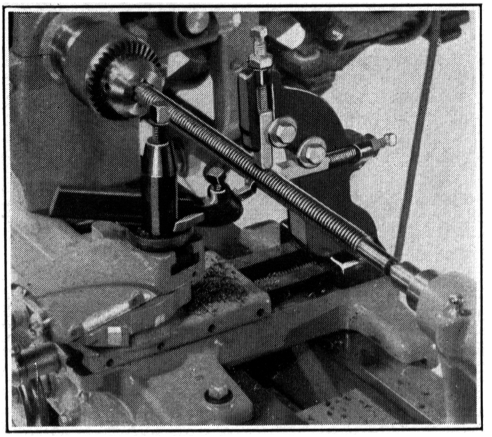

FIG. 185. Threading a long screw with the aid of the follower rest.

in the same manner as with the steady rest jaws (page 158).

During the cutting operation apply plenty of lubricant on the work at the point of bearing with the jaws. After each cut the jaws should be adjusted to retain accuracy. Both the follower rest and steady rest are often used to brace a slender rod (Fig. 186).

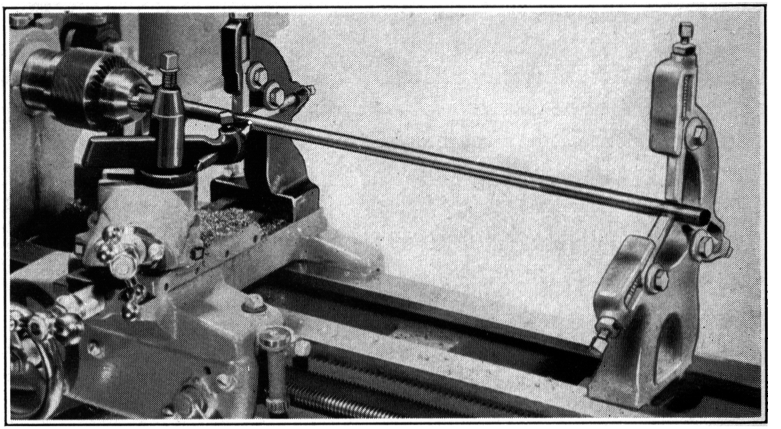

FIG. 186
Using both the steady rest and follower rest to support a long, small-diameter rod.

THE CUT-OFF TOOL

Quick, clean cutting-off requires careful machining and a properly ground tool. The cut-off tool must be set into the work at an exact right angle and with the cutting edge on dead center (see Fig. 190).

Figures 187 and 188 show the tool recommended for most operations. This tool is

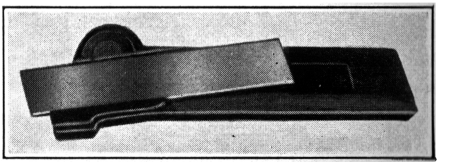

FIG. 187. Cut-off Tool.

supplied ready - ground with correct top rake, front and side clearance, so that the front face cuts freely without binding (Fig. 189). The cutter blades are replaceable, and the holder is offset to permit cut-off operations close to the headstock spindle.

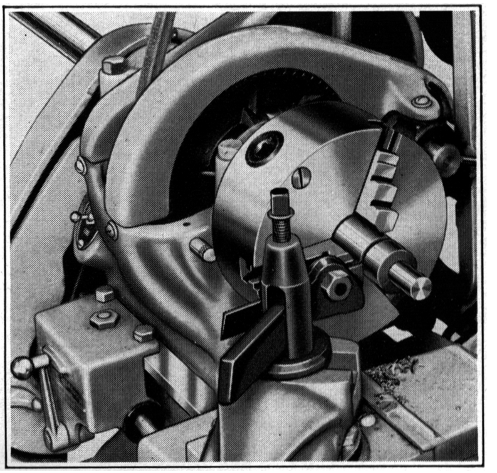

FIG. 188. Cutting off bar stock fed through headstock spindle.

The two most common troubles in cutting-off are "chatter" and "hogging-in." The following paragraphs tell how these troubles are avoided—follow these rules carefully:

RIGIDITY:—Not only the tool and carriage, but *every part of the lathe* must be tight when cutting off—loose fits in the spindle, carriage and compound rest will surely cause trouble. See that the gibs on the rear of the carriage fit snug and that the carriage is locked securely in position on the bed. Tighten the gibs on the cross feed and compound feed. Set the tool holder as far back into the tool post as possible and keep the tool post screw tightened. The tool is fed into the work with the cross feed.

RATE OF FEED: The rate of feeding-in is especially important because the chip is actually wider than the cutting edge of the tool blade. A fast feed tends to cause "hogging," either stopping the lathe or breaking the tool—a slow feed usually produces chatter. Experience aids in "feeling out" the exact rate of feed to avoid both chatter and "hogging-in."

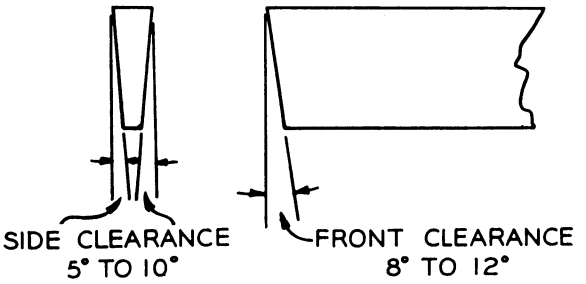

FIG. 189. Clearance angles of cut-off tool.

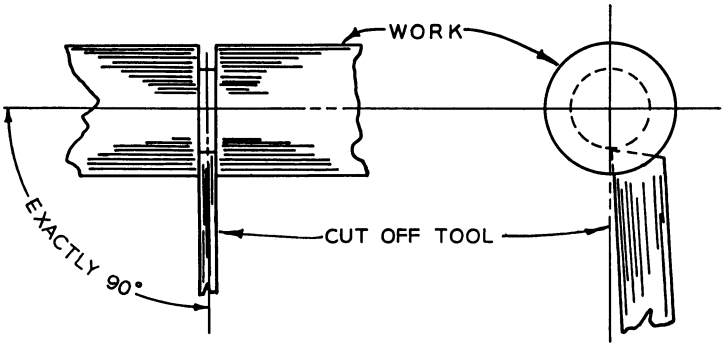

FIG. 190
Setting the cut-off tool into the work. The blade must be at a right angle to the work, and the point should be on the exact center line.

SPINDLE SPEED: The spindle speed should be about 2/3 of the speed recommended for general turning of the material being cut off (Fig. 56, page 49). Do not use too slow a speed.

LUBRICATION: Thorough lubrication is absolutely necessary during the cut-off operation. In large lathe work, a continuous stream of lubricant is directed at the front of the cut-off tool. When cutting off on a small lathe, the lubricant is usually applied with a brush or oil can. Use the same type of lubricant recommended in Part 4 for general turning of the various materials.

FURTHER RULES FOR CUTTING-OFF

1. Set the cutting edge of the tool on the lathe center line—the tool blade should be at an exact right angle with the work (Fig. 190).

2. If the tool "hogs-in" and stops the spindle rotation, stop the motor and reverse the spindle by hand before backing out the tool with the cross feed. After resetting the tool, feed in slowly and remove the bad spots.

3. Never complete a cut-off of work which does not swing free at one end.

4. Cut off as close to the headstock as possible.

5. When cutting off soft copper or aluminum, refer to page 58 or 62.

6. To resharpen the cut-off tool shown in Figure 187, grind the front edge only, allowing front clearance (see Fig. 189).

7. Figure 58, page 51, shows how grooves can be cut with the cut-off tool to "block-out" the work and indicate the end of a cut. Each groove is cut slightly deeper than the finish-diameter—this simplifies the turning operation by providing an easy stopping place after each cut.

Experiment to determine the proper spindle speed and rate of feed for the diameter and material being cut off—this is the best way to get the "feel" of the operation.

THE KNURLING TOOL

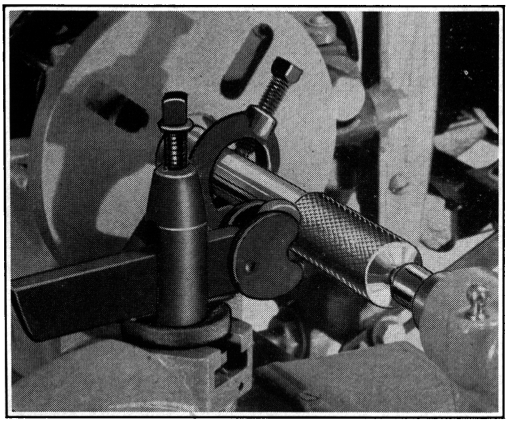

FIG. 191. Knurling a Tool Handle.

Figure 193 shows a close-up view of a knurl and the two formed cutters which roll with the work during the knurling operation. A sharp, even, diamond-shaped knurl provides a perfect gripping surface for tool handles, nuts, markers and instruments.

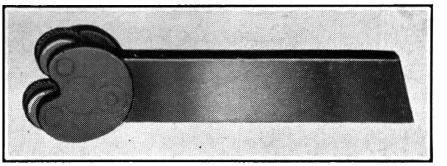

FIG. 192. Knurling Tool.

The type of tool shown in Figure 192 is recommended for knurling operations. The "floating" construction of this tool makes the rollers self-centering, assuring equal pressure on each roller and resulting in two sets of lines of equal depth. The rollers are hardened tool steel.

THE KNURLING OPERATION

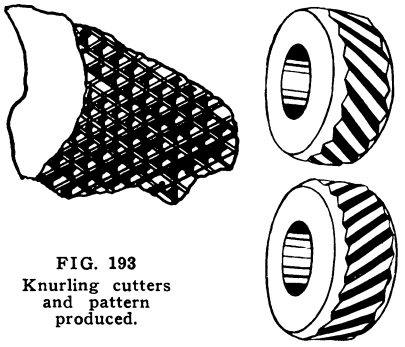

FIG. 193
Knurling cutters and pattern produced.

The knurling tool is set rigidly in the tool post at right angles to the face of the work and as far back in the tool post as possible. Adjust belts for proper spindle speed (see Fig. 55, page 47):

Diameters 1½" and over	83 R.P.M.
Diameters from ½"-1½"	164 R.P.M.
Diameters under ½"	266 R.P.M.

Because of the pressure exerted in knurling, the work should be mounted between centers whenever possible, and small diameters should be supported with the steady rest. When the work is held in a chuck, cut the knurl as close to the headstock as possible.

Advance the tool into the work with the cross feed until the dial reading has been advanced about .050 inch. Stop the lathe and without backing out the tool, check the pattern produced. Usually, with a cut of this depth, a perfect diamond pattern will result. When the pattern is not as desired, back out the tool and take a cut in another place on the work. After the correct design is obtained the test cuts will be rolled into a perfect knurl during the final cutting process.

When a test cut shows the proper pattern, engage carriage feed. Apply plenty of lubricant. *Keep tailstock center well lubricated.*

At the end of the cut shift the *reverse lever* to "Neutral," force the tool .005 or .006 inch deeper and then shift the reversing lever to cut back to the starting point. Continue the knurling operations until the desired depth is reached. *After the knurling process is started, never back out the tool until the knurl is completed.*

THE CARRIAGE STOP

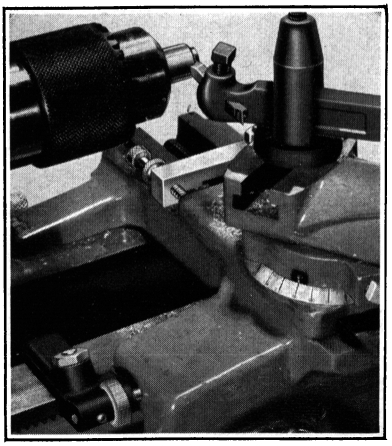

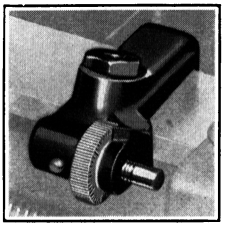

FIG. 194
Carriage Stop.

FIG. 195
A repeat operation requiring both the carriage stop and the cross slide stop. The bar is being fed through the headstock spindle.

The carriage stop (Fig. 194) indicates the proper stopping point of the carriage for accurate duplicate work. It is clamped on the front bed way as shown in Figure 195. Some of the frequent repeat operations which usually require the carriage stop: boring or facing to a given depth, cutting-off at a given point, duplicating longitudinal cuts (for example, mica undercutting) and laying out work on a cylindrical surface. The carriage stop shown in Figure

194 has a micrometer-type screw which permits a very exact setting. Always wipe the front bed way clean at the point where the carriage stop is to be clamped.

The carriage stop cannot automatically stop the power feed—the carriage should always be fed by hand for the last part of a cut. If the automatic feed is allowed to force the carriage into the carriage stop, either the stop or the lead screw bearing will be broken.

THE CROSS SLIDE STOP

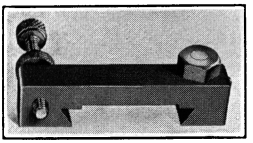

FIG. 196
Cross Slide Stop.

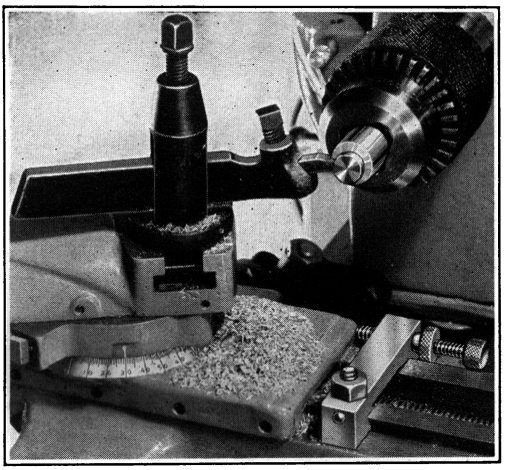

FIG. 197
Another view of the same repeat operation shown in Figure 195. This angle shows how the cross slide stop gauges the depth of the cut. Note carriage stop in background.

The cross slide stop (Fig. 196) indicates the proper depth at which to stop the cross feed, much in the same manner as the carriage stop is used as a guide in longitudinal operations. It is especially valuable for threading and turning down a rough diameter. The cross slide stop is mounted on the cross slide dovetail, either in front of or behind the compound rest. An adjustable screw and lock nut permit accurate setting (see Fig. 197). In mounting the cross slide stop on the cross slide dovetail, first remove the guard. Then clean the dovetail ways and clamp the stop in the approximate position required. Turn the adjusting screw into exact position and lock with the knurled nut. Place a small piece of paper or cardboard over the cross feed screw to keep it free from dirt and chips during the cutting operation.

During threading operations or whenever the tool is fed in with the compound, the cross feed is used only to back the tool out at the end of each cut. The cross slide stop, combined with the micrometer graduations of the cross feed control handle on the

Atlas lathe, assure an accurate "zero" reading before the compound rest feed is advanced for the next cut. *Do not run the compound rest against the cross slide stop with too much force.*

THE MILLING ATTACHMENT

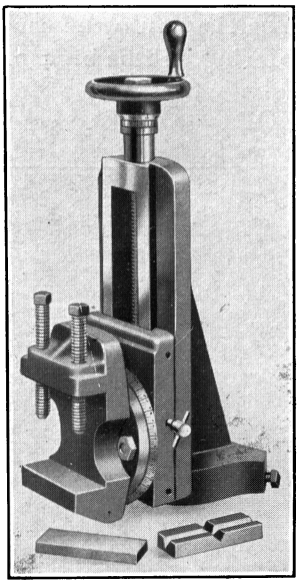

FIG. 198
Milling Attachment.

The versatile milling attachment (Fig. 198) converts the Atlas lathe into a small milling machine. Six of the more frequent operations are illustrated in Figures 200 to 205. The work is held in the milling vise jaws, and the various types of cutters (Fig. 199) are held in the headstock spindle with the chuck or holding collet shown in Figure 206.

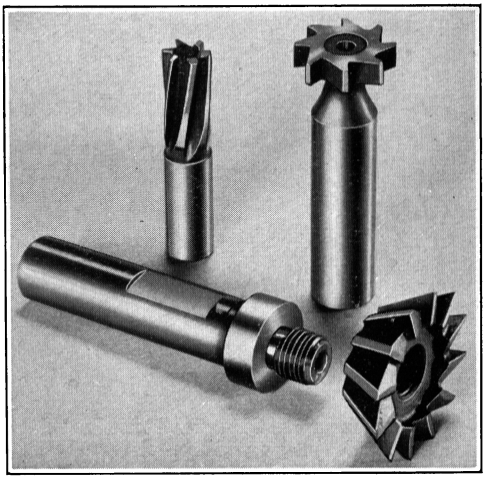

FIG. 199 (Right)
Most commonly-used milling cutters — spiral-straight shank end mill, Woodruff keyway cutter, and angular cutter or face mill (with holding arbor).

The end mills are suitable for milling slots, facing and routing small work, squaring or splining shafts, cutting straight keyways, and general milling operations. The primary use of the Woodruff cutters is the cutting of Woodruff keyways—other uses include the cutting of slots, grooves, T slots, etc. Angular cutters cut dovetails and angles of less than 90° and are also used for facing operations.

MOUNTING WORK IN THE MILLING ATTACHMENT

Remove the compound rest from the cross slide swivel.[1] Clean the swivel and the base of the milling attachment. Mount the

[1]When the compound lock mechanism is controlled by two clamp screws, loosen these screws about ½ inch only and raise compound rest with a twisting motion. In this way, plunger pins are kept from twisting out of line with bevel of central pilot.
Similar precautions must be taken when mounting the milling attachment and remounting the compound rest: Remove the clamp screws completely and PUSH plunger pins up to bevel of pilot—then reinsert and tighten clamp screws.

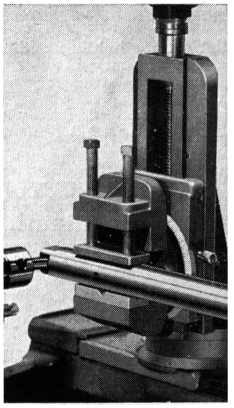

FIG. 200
Squaring a Shaft.

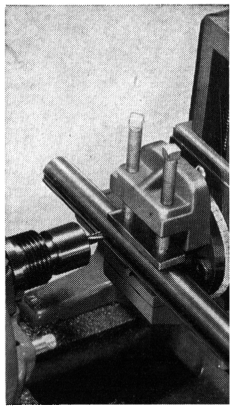

FIG. 201
Milling a keyway with ¼ inch end mill.

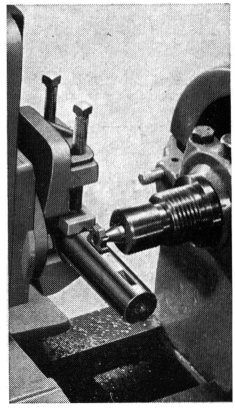

FIG. 202
Milling a Woodruff Keyway.

milling attachment at the desired angle, using the swivel graduations as a guide. Tighten gibs on carriage, cross feed and milling attachment dovetail slide. Loosen milling vise jaws, insert work and tighten. The vise can be swivelled to any desired angle and is adjusted for height with the graduated handwheel.

HOLDING THE MILLING CUTTER

The holding collet shown in Figure 206 is preferred for holding the milling cutter. The headstock spindle chuck is not recommended because the cutter shanks and the chuck jaws are extremely hard and would slip during the milling operation.

The complete collet set includes one arbor for holding straight

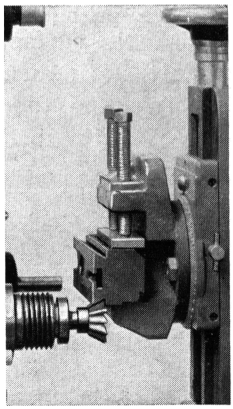

FIG. 203
Milling a Dovetail Slot.

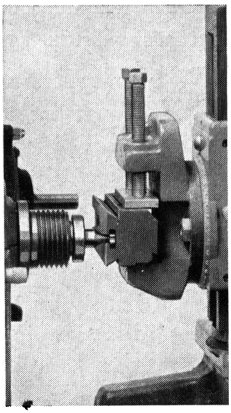

FIG. 204
Milling a T-slot with a Woodruff cutter. A straight slot was first cut with an end mill.

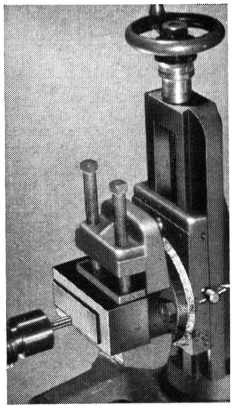

FIG. 205
Routing.

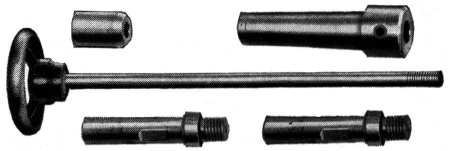

FIG. 206
Holding collet set for holding milling cutters. This set consists of: draw bar, sleeve, one arbor for straight shank cutters and two arbors for threaded angular or facing cutters. Collet bushings are required to adapt end mills to this set.

shank cutters and two arbors for threaded angular cutters. A collet bushing or arbor is also required for all straight shank end mills except the 1/2 inch diameter. The Woodruff keyway cutters are held directly in the collet arbor without bushings.

Pass the draw bar through the spindle and tighten the arbor into spindle taper by turning handwheel. Tighten cutter in arbor by locking Allen set screw. The draw bar, arbor, bushing, cutter shank and lathe spindle must be wiped clean and dry. When mounting the milling cutter in the collet arbor, be sure to select the proper size of collet bushing, if one is required.

DEPTHS OF CUTS AND FEEDS

When the work is fed across the milling cutter with the cross feed, the depth of cut and rate of feed is determined primarily by the "feel" of the operator. Take light cuts and feed in evenly and slowly until the correct feed can be judged. Never force the work into the cutter too fast. Cuts should be about 1/16" or less.

SPINDLE SPEEDS FOR MILLING

The cutting speed during a milling operation should be approximately 2/3 of the speed recommended for general turning of the material being machined (see Part 4). Figure 208 gives the lathe spindle speed required to obtain a desired surface speed when using the various milling cutters. Thus, knowing 2/3 of the surface speed recommended for a certain metal or plastic (Part 4), first use Figure 208 to find the proper speed for the cutter being used, then refer to Figure 55, page 47 for the belt set-up to obtain that speed.

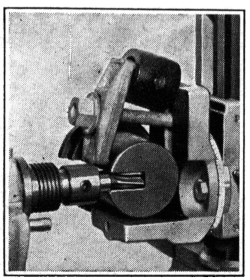

FIG. 207
Holding extra large work in the clamping plate.

MILLING EXTRA LARGE WORK

Figure 207 shows how extra large work is held firmly in position for milling. The clamping plate is mounted on the milling attachment in place of the standard vise. Diameters up to 2 3/4 inches can be held in this way. Figure 121, page 93, shows another application for the clamping plate.

FIG. 208

TABLE OF CUTTING SPEEDS FOR MILLING

Actual Speeds Obtainable on the Atlas Lathe to Give Approximately the Surface Speeds Shown

Size of Milling Cutter	*Surface Speed in Feet Per Minute*										
	30	*40*	*50*	*60*	*70*	*80*	*100*	*120*	*150*	*200*	*300*
1/4" End Mill...	418	685	805	805	805	1270	1270	2072	2072	——	——
5/16" End Mill...	418	500	685	685	805	805	1270	1270	2072	——	——
3/8" End Mill...	266	418	500	685	685	805	805	1270	1270	2072	——
7/16" End Mill...	266	266	418	500	500	685	805	805	1270	2072	——
1/2" End Mill...	164	266	418	418	500	685	685	805	1270	1270	2072
5/8" End Mill...	164	266	266	418	418	500	685	685	805	1270	2072
Woodruff Cutters											
1/2" x 1/8".....	164	266	418	418	500	685	685	805	1270	1270	2072
3/4" x 3/16".....	164	164	266	266	418	418	500	685	805	1270	1270
1" x 1/4".....	112	164	164	266	266	266	418	418	500	805	1270
1-1/8" x 5/16"....	112	112	164	164	266	266	266	418	500	685	805
1-1/4" x 3/8".....	83	112	164	164	164	266	266	418	418	685	805
Angular Cutters											
1-1/4" x 7/16"....	83	112	164	164	164	266	266	418	418	685	805
1-5/8" x 9/16"....	70	83	112	112	164	164	266	266	266	418	685

DIMENSIONS OF STANDARD KEYS AND KEYWAYS

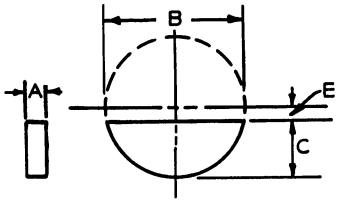

FIG. 209

WOODRUFF KEY DIMENSIONS

Nominal Size of Key A × B	Width of Key Min. A	Diam. of Key Min. B	Height of Key C	Distance below Center E
1/8 x 1/2	.1250	.490	.198	3/64
3/16 x 3/4	.1875	.740	.308	1/16
1/4 x 7/8	.2500	.865	.370	1/16
5/16 x 1	.3125	.990	.433	1/16
3/8 x 1 1/4	.3750	1.240	.542	5/64

Note: Allowable oversize of dimensions A and B is .010"—of dimension C is .005". Optimum key width is equal to one-quarter the shaft diameter. Keys should be chosen to approximate this relation as closely as possible.

DIMENSIONS OF WOODRUFF KEYWAY SLOTS

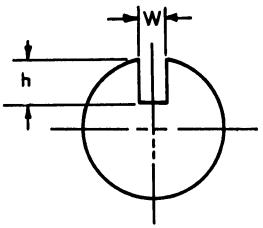

FIG. 210

Nominal Key Size A × B	WIDTH W Max.	WIDTH W Min.	DEPTH H Max.	DEPTH H Min.
1/8 x 1/2	.1255	.1240	.1405	.1355
3/16 x 3/4	.1880	.1863	.2193	.2143
1/4 x 1	.2505	.2487	.3130	.3080
5/16 x 1 1/8	.3130	.3111	.3278	.3228
3/8 x 1 1/4	.3755	.3735	.3595	.3545

Note: To determine distance key projects from slot, subtract depth "h" in Figure 201 from height of key "C" in Figure 200. This should nominally be equal to one-half the width of the key.

SIZE OF STANDARD KEYWAYS FOR MILLING CUTTERS AND SOME SPECIAL SHAFTING

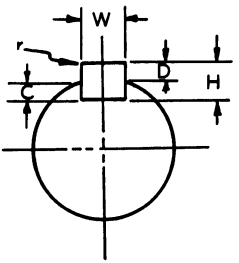

FIG. 211

Shaft Size	Key Size W × H	Corner Radius r	Cutter Keyway Depth D	Shaft Keyway Depth C
1/2	3/32 x 3/32	.020	3/64	3/64
5/8-7/8	1/8 x 1/8	1/32	1/16	1/16
1	1/4 x 1/4	3/64	3/32	5/32
1 1/4	5/16 x 5/16	1/16	1/8	3/16
1 1/2	3/8 x 3/8	1/16	5/32	7/32
1 3/4	7/16 x 7/16	1/16	3/16	1/4
2	1/2 x 1/2	1/16	3/16	5/16
2 1/2	5/8 x 5/8	1/16	7/32	13/32
3	3/4 x 3/4	3/32	1/4	1/2
3 1/2	7/8 x 7/8	3/32	3/8	1/2
4	1 x 1	3/32	3/8	5/8

Note: When a square key is used, dimensions D and C are not equal except on the smaller shafts. If desired, a flat key with a dimension H equal to twice dimension D can be used.

AMERICAN STANDARD (A.S.A.) SQUARE AND FLAT PARALLEL STOCK KEYS

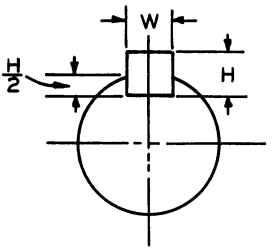

FIG. 212

Shaft Diameter	Square Key W × H	Flat Key W × H
1/2- 9/16	1/8 x 1/8	1/8 x 3/32
5/8- 7/8	3/16 x 3/16	3/16 x 1/8
15/16-1 1/4	1/4 x 1/4	1/4 x 3/16
1 5/16-1 3/8	5/16 x 5/16	5/16 x 1/4
1 7/16-1 3/4	3/8 x 3/8	3/8 x 1/4
1 13/16-2 1/4	1/2 x 1/2	1/2 x 3/8
2 5/16-2 3/4	5/8 x 5/8	5/8 x 7/16
2 7/8-3 1/4	3/4 x 3/4	3/4 x 1/2
3 3/8-3 3/4	7/8 x 7/8	7/8 x 5/8
3 7/8-4 1/2	1 x 1	1 x 3/4

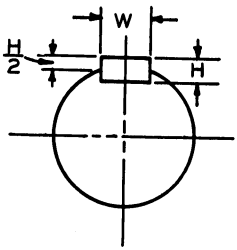

FIG. 213

Note: Dimension H/2 is measured at the side of the keyseat, not in the central plane of the key corresponding to the shaft diameter.

GEAR CUTTING

Figure 214 shows how the milling attachment is used in the cutting of gears. The gear cutting attachment mounted in the milling vise holds the blank gear at one end and an indexing gear at the other end. The accuracy of the standard Atlas change gears makes them ideal indexing gears for operations of this type. The outer shank of the index shaft is designed to accommodate Atlas change gears. If another gear is desired as an "index" gear, the proper gear adapter can be made easily for the index shank.

A blue print for making this gear cutting attachment is available at the Atlas factory. The charge of 50 cents covers cost of printing and mailing.

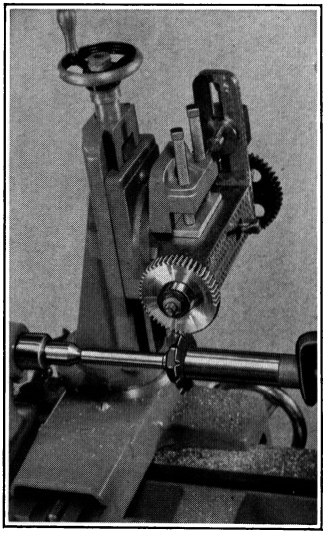

FIG. 214. Cutting a Gear.

THE TOOL POST GRINDER

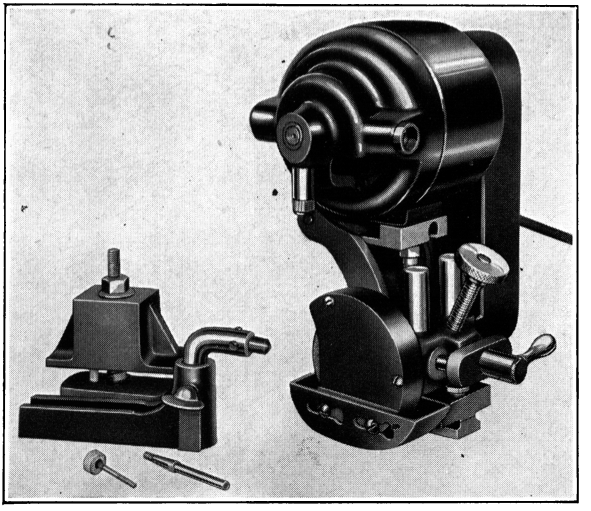

FIG. 215. Tool Post Grinder.

The tool post grinder shown in Figure 215 is used for both external and internal finishing whenever precision and a polished surface is required. Some typical grinder jobs: hardened shafts,

THE TOOL POST GRINDER IN OPERATION

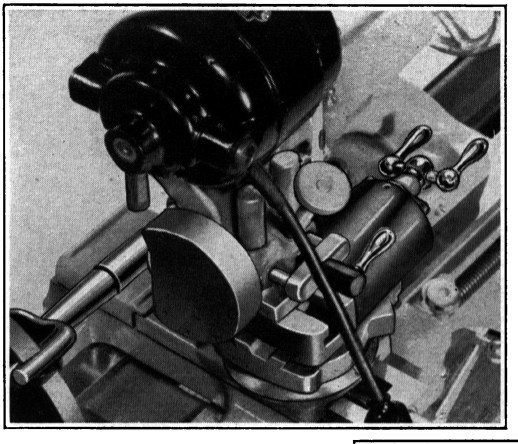

FIG. 216

Grinding a chuck arbor mounted between centers. Note that compound rest has been set in a position to grind the proper taper. Taper-grinding is also performed with the tailstock set over, or with the taper cutting attachment (page 190).

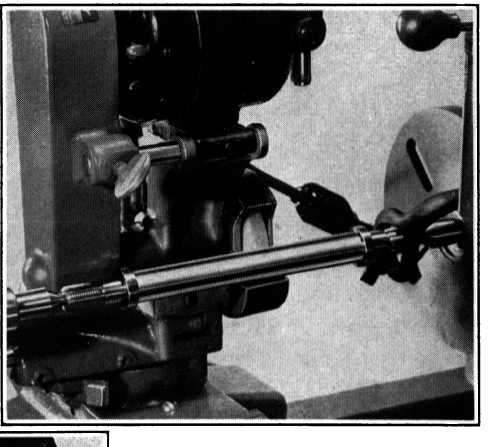

FIG. 217

Grinding a spindle to a close tolerance. This setup illustrates how the grinding wheel is set on the exact center line. The compound rest is set at 0, and the grinder is fed back and forth by hand or with the power feed.

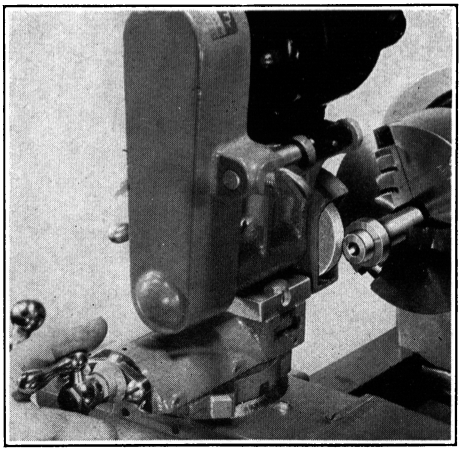

FIG. 218

Grinding the bearing end of a hardened shaft. For this job the compound rest has been set at 90° and the grinder is being fed back and forth with the compound rest feed. Note that cross feed screw guard is in position, protecting screw from emery dust.

bushings, tools, dies, lathe centers, arbors, tapered sockets, valves, reseating cutters, milling cutters, valve stems, tappet screws, spiral, taper or straight reamers. Armature undercutting saws can be attached to the internal quill for undercutting mica. A complete diamond dresser for keeping wheels true and sharp is furnished as standard equipment. The Atlas lathe grinder is adaptable to other make lathes.

MOUNTING THE GRINDER

The grinder is in correct position for most operations when the grinder spindle is on the exact lathe center line. After the tool post has been removed, clean both the grinder base and tool post slot, and clamp the grinder in the slot. Remove the grinder belt guard and loosen clamp on elevating screw. Align center of grinder spindle with lathe tailstock center by adjusting elevating screw. Retighten clamp on elevating screw and replace belt guard.

Swivel and tighten the compound rest at the correct angle. When grinding a surface parallel to the lathe center line, set the compound rest at 0 and feed the carriage back and forth by hand or with the power feed. When grinding at an angle, the compound rest is set at the proper angle and the grinder is fed back and forth with the compound rest feed. The taper attachment (page 190) simplifies taper grinding.

IMPORTANT: *PROTECT THE LATHE*

Grinding dust is a mixture of abrasive dust and fine particles of steel. This dust is extremely harmful when allowed to fall and remain on the lathe bed ways and cross slide. *Always cover the bed ways and the cross slide during grinding operations.*

Paper, oilcloth or canvas makes a good cover. When using a cloth, be sure it is closely woven. After the grinding operation, clean the bed ways and carriage dovetails thoroughly. Then apply plenty of clean oil.

DRESSING THE GRINDING WHEEL

When the grinder has been mounted in position and the lathe is properly protected from emery dust, the grinding wheel should be dressed. Figure 219 shows how the dressing tool is mounted in the holder which has been clamped to the lathe bed. The diamond point of the dresser should be at an angle and slightly below center as shown in Figure 220.

With the diamond point tightened in the proper position, start the grinder and move the wheel SLOWLY across the diamond with the same feed which will be used in the grinding operation.

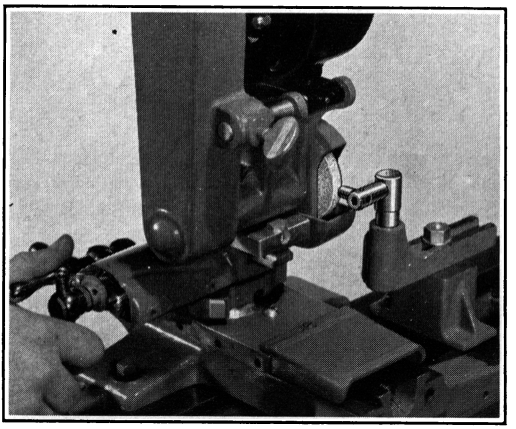

Take light cuts and run the wheel back and forth until the diamond cuts evenly and has removed all glazed surface from the wheel.

For a fine accurate finish, the grinding wheel must be dressed before every operation and in exactly the position in which it will be used.

FIG. 219 (Left)
Dressing External Grinding Wheel.

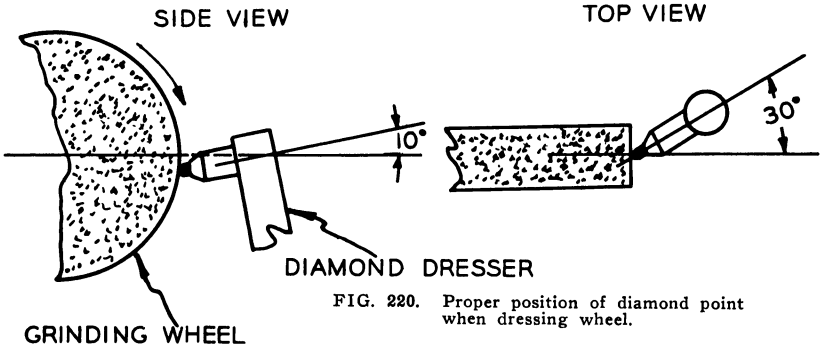

FIG. 220. Proper position of diamond point when dressing wheel.

SPEEDS FOR GRINDING

Two step pulleys from the motor and wheel spindles of the grinder give two spindle speeds: 6800 and 10400, full load. *Always use the lower speed for external grinding and the higher speed for internal grinding.*

DIRECTION OF LATHE SPINDLE ROTATION

In grinding operations the work must turn in a direction opposite that of the grinding wheel. Figure 221 shows how the rotation of the lathe spindle must be clockwise (backward) for external grinding and counterclockwise (forward) for internal grinding.

REVERSING SWITCH:—a dependable reversing switch is essential not only for grinding and polishing but also for such operations as tapping, nut-setting and wood-sanding. The reversing switch shown in Figure 222 is mounted easily in a convenient position on the Atlas lathe countershaft bracket. This switch is satisfactory for practically any motor wired for reversing.

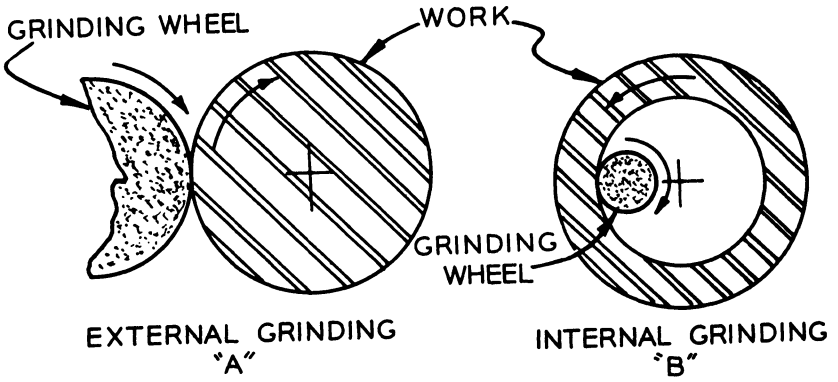

FIG. 221
The work must always turn in a direction opposite that of the grinding wheel. At "A" it is necessary to reverse lathe spindle—at "B" the same effect is obtained by running the lathe spindle in a "Forward" direction.

FIG. 222 (Right)
Drum-type reversing switch with mounting bracket.

EXTERNAL GRINDING

Remember that grinding is a finishing operation. The work should be turned as close to the final finish size as possible before the grinding operation is begun.

With the work and the grinder mounted in position and the grinding wheel dressed properly, advance the wheel into one end of the work. Take light cuts across the entire length of the work. If using the automatic carriage feed, set up the change gears for the .0033 inch feed. Hand feeds should be very slow and even. The last finishing cut should be less than .001 inch—very often a last pass is taken without advancing the feed. When hardened stock is being ground, redress the wheel before taking the final cuts.

INTERNAL GRINDING

Figure 223 shows a typical internal grinding operation. The quill which holds the grinding wheel for internal work is threaded and tapered to fit inside the grinder spindle after the external wheel is removed (see Fig. 224). The proper grinder spindle speed

is 10400 R.P.M. (page 174) and the lathe spindle must be rotating in a "Forward" direction (see Fig. 221).

To mount the internal grinding wheel: Remove front plate on external wheel guard, large wheel collar, and external wheel. After cleaning threads and tapers, turn quill into grinder spindle — this fit should be snug but not forced. Remove fillister screw at end of quill and screw proper wheel into quill BY HAND (do not use wrench or pliers). Dress wheel at proper angle (see page 173).

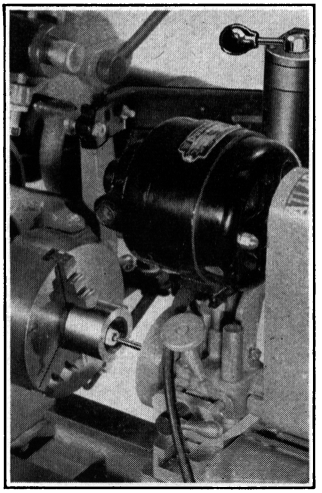

FIG. 223. Grinding the inside of a bushing.

During internal grinding operations, it is necessary to take light cuts and feed in very slowly because of the overhang of the grinding wheel. After the last cut allow the wheel to pass back and forth across the work several times without advancing the feed.

Be sure to remove the external wheel before beginning internal grinding operations.

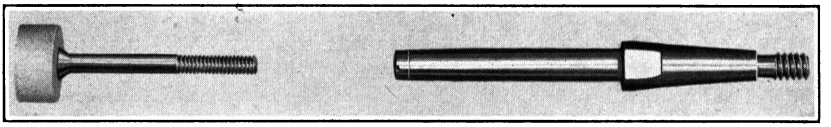

FIG. 224. Arbor and wheel for internal grinding. The threaded portion serves only to pull arbor into tapered socket.

GRINDING VALVES, 15° to 75°

Mount valve in Jacobs headstock chuck as shown in Figure 225. Mount external wheel on grinder spindle, align spindle with tailstock center (page 173), and dress wheel with compound rest set at proper angle for valve. With the lathe spindle turning in a direction opposite that of the grinding wheel, feed in slowly with the compound rest feed, taking light cuts.

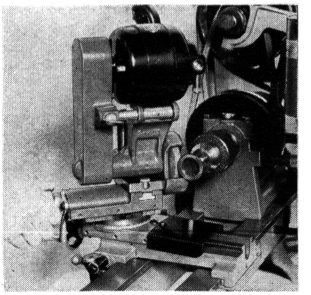

FIG. 225. Grinding 45° Valve.

GRINDING FLAT VALVES, 90°

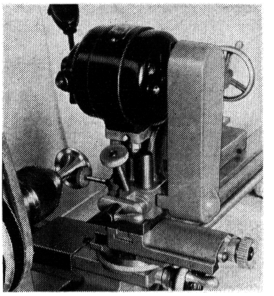

FIG. 226
Grinding 90° Valve.

Mount valve in Jacobs headstock chuck as shown in Figure 226. Mount internal wheel on grinder spindle and align spindle with tailstock center (page 173). With compound rest set at 0, dress grinding wheel, feeding across diamond with compound rest feed. With the lathe spindle turning in a direction opposite that of the grinding wheel, feed in slowly with the compound rest feed, taking light cuts.

VALVE STEM AND CUTTER GRINDING ATTACHMENT

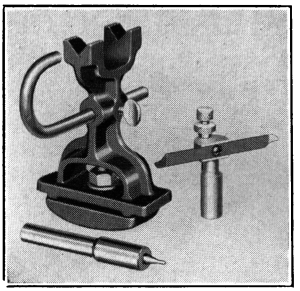

FIG. 227
Valve Stem and Cutter Grinding Attachment.

The attachment shown in Figure 227 is required for grinding valve stems, tappet screws and valve reseating cutters. It includes a vee-block for accurate valve stem work, index finger and cutter arbor with centering pin to set proper clearance for grinding reseating cutters. Figures 228, 229, and 230 show different parts of this attachment in operation.

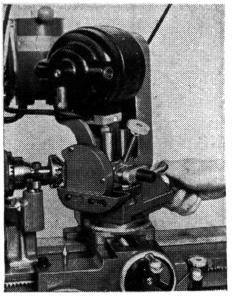

FIG. 228
Grinding 45° Reseating Cutter.

GRINDING VALVE RESEATING CUTTERS, 15° to 75°

Mount external wheel, align grinder spindle with tailstock center, and dress wheel with compound rest set at proper angle. Mount arbor with centering pin in Jacobs headstock chuck. Remove diamond dresser from holder and mount index finger in its place. Adjust height of end of proper index finger so that it just touches the *bottom* of the centering pin in arbor. Remove centering pin, mount cutter on arbor and lock index finger in position *under* a cutter tooth.

Lock carriage in proper position and grind first cutter tooth, feeding in fairly fast with the compound rest feed. After grinding one tooth, revolve cutter so that index finger is under next tooth. Repeat until all teeth are ground. The index finger holds each tooth in the proper position during the grinding operation.

GRINDING 90° VALVE RESEATING CUTTERS AND END TEETH OF END MILLS

Mount internal wheel, set grinder spindle slightly below tailstock center, and dress wheel with compound rest set at 0. Mount arbor and centering pin in headstock chuck and remove diamond dresser from holder. Mount index finger in place of diamond so that finger points in from rear of lathe. Adjust height of proper end of index finger so that it just touches the *top* of the centering pin in the arbor. Remove centering pin, mount cutter on arbor and set index finger at a right angle to bed ways. Lock finger in position *over* a cutter tooth.

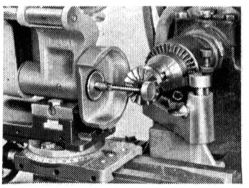

FIG. 229. Grinding 90° Reseating Cutter.

Lock carriage in position, and take a light pass over each cutter tooth, feeding in fairly fast with the compound rest feed. Then remove cutter and place on flat surface to test flatness of grind. If necessary, adjust position of compound rest. Remount cutter and continue grinding.

GRINDING VALVE STEMS, TAPPET SCREWS, ETC.

Mount grinder and set compound rest at 90° as shown in Figure 230. Clamp vee-block to lathe bed, place stem or screw in vees, and tighten arm at proper length. Hold stem in vees and advance carriage so that wheel sparks on work. Advance carriage and begin grinding—feed in with compound feed and revolve stem or screw by hand during operation. Each valve of a set may be ground exactly the same by gauging depth of feed at compound handle.

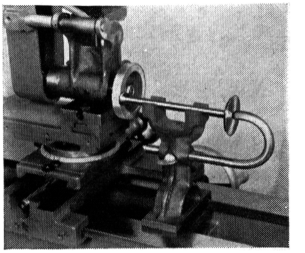

FIG. 230. Grinding Valve Stem.

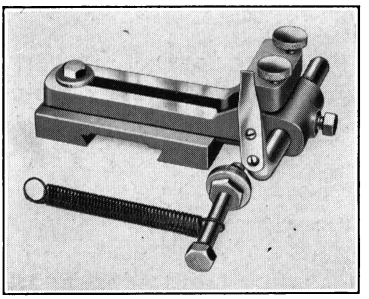

FIG. 231. Reamer Grinding Attachment.

REAMER GRINDING ATTACHMENT

The attachment shown in Figure 231 is required for sharpening spiral, taper or straight reamers, and side teeth of spiral or straight end mills. It consists of a holding fixture, index finger guide and spring tension clamp. Figures 232 and 233 show this attachment in operation.

GRINDING STRAIGHT AND SPIRAL REAMERS

Mount special wheel (No. 478) on grinder spindle, align spindle with tailstock center, and dress wheel with compound rest set at 0 (page 173). Then set compound rest at a slight angle (about 5°) so that only the corner of the wheel will come in contact with the reamer. This angle reduces the possibility of "burning" the cutter. Mount the reamer between lathe centers, making sure that both center holes are free from burrs and dirt. Mount reamer grinding attachment on rear of carriage as shown in Figure 232. Locate cutter rest index finger under a reamer tooth directly behind what will be the point of contact with grinding wheel. Have the index finger *square* with the back of the reamer tooth—spiral reamers require a slight amount of angle. Place one end of tension spring over tail of lathe dog and tighten tension spring bolt in proper face plate slot, so that reamer is held properly against index finger as carriage is moved back and forth along the length of the reamer. The tail of the lathe dog is *not* placed in the face plate slot but swings free. With this set-up a spiral reamer will revolve during the grinding operation, keeping the reamer tooth square against the grinding wheel. A straight reamer will not revolve during the grinding operation. Be sure that the grinding wheel does not touch reamer when changing from one tooth to the next—it may be necessary to remove reamer from centers. When beginning a new tooth, adjust tension of spring by revolving lathe spindle slightly. To grind taper at end of reamer, set compound at proper angle and feed straight in with compound feed.

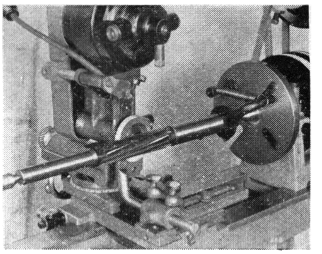

FIG. 232.
Grinding Spiral Reamer.

GRINDING SOLID REAMERS WITHOUT REDUCING OUTSIDE DIAMETER

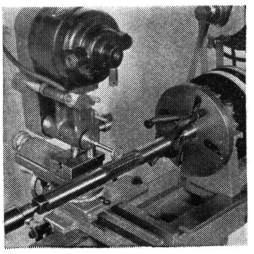

FIG. 232A
Grinding Solid Reamer.

Mount internal "saucer" wheel (No. 479) on quill and set compound rest at 0 (see Fig. 232A.) Mount reamer between lathe centers, making sure that both center holes are free from burrs and dirt. Adjust grinder height so that face of wheel is square with the reamer tooth which is at the *top* of the reamer. Place one end of tension spring over tail of lathe dog and tighten

tension spring bolt in proper face plate slot so that face of reamer tooth is held against grinding wheel. Grind face of tooth only. The tail of the lathe dog is not placed in face plate slot, but swings free. Be sure that the grinding wheel does not touch the reamer when changing from one tooth to the next. When beginning a new tooth, adjust tension of spring by revolving lathe spindle slightly.

GRINDING LATHE CENTERS

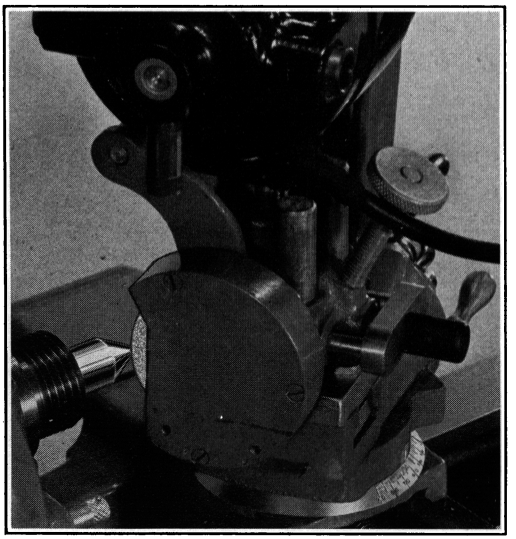

FIG. 233. Grinding Lathe Center.

With the center and sleeve mounted in the lathe spindle, dress external wheel with the compound rest set at exactly the proper angle (see Fig. 233). Adjust belts to obtain a slow lathe spindle speed and shift reversing switch lever so that lathe spindle is turning in a direction opposite that of the grinding wheel. Feed up to the center with the carriage handwheel, lock carriage in position and feed across center slowly with compound rest feed. Take light cuts.

UNDERCUTTING ARMATURE MICA WITH THE TOOL POST GRINDER

A set of five undercutting saws (.015", .020", .025", .030" and .035") is furnished as standard equipment with the Atlas tool post grinder. After the trueing cut (page 182), choose an undercutting saw which is the same width as the commutator slot. Turn quill into grinder spindle after removing front plate on external wheel guard, large wheel collar, and external wheel. Remove fillister screw at end of quill, then place over proper undercutting saw and tighten.

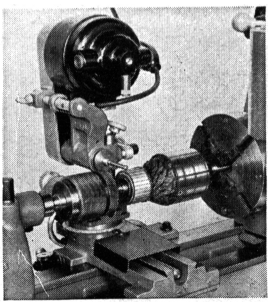

FIG. 234
Undercutting Mica with Tool Post Grinder.

Adjust grinder so that saw is exactly on the lathe center line and in position to take

a cut of about the same depth as the width of the slot (see Fig. 234). Start the grinder and feed the saw through the mica with the carriage handwheel—hold the armature with the left hand and be careful not to cut into the copper segments. It is recommended that the carriage stop (page 164) be mounted in position on the bed ways, so that each slot is cut exactly the same length.

NOTES ON GRINDING

A spotty, mottled surface usually means that it is time to dress the grinding wheel.

See that the work is held rigidly—vibration causes poor work.

No lubricant or cutting compound is necessary except for production work.

Keep the tool post grinder clean and well oiled. Oil the ball bearings and all moving parts every time the grinder is used.

Always Take Light Cuts When Grinding.

ARMATURE WORK ON THE ATLAS LATHE

Figures 235 and 236 show two steps in reconditioning armature commutators. First, the commutator segments are "trued" by a light, accurate cut with a carefully ground tool. Second, the mica insulation is undercut, using either the motor driven undercutter (Fig. 237) or the tool post grinder (page 180).

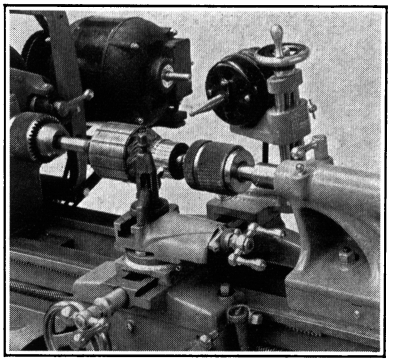

FIG. 236 (Right)
Undercutting mica on armature. This armature shaft has center holes and is driven with a dog during the trueing operation. Note that compound rest can be left on carriage during this operation.

FIG. 235 (Left)
Trueing a centerless armature before cutting mica. Armature is being supported by Jacobs headstock and center rest chucks. Note undercutting attachment on back of carriage.

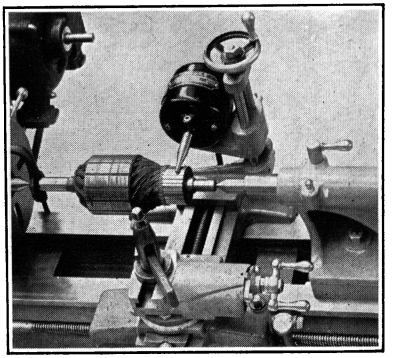

MOUNTING THE ARMATURE

The two methods of mounting the armature are illustrated in Figures 235 and 236. Armature shafts with center holes are mounted between lathe centers and driven with a dog (Fig. 236). Be sure that both center holes are free from burrs and dirt. Centerless armatures are mounted as shown in Figure 235—the Jacobs headstock chuck drives the shaft, and the Jacobs center rest chuck (Fig. 238) supports the tailstock end. Tighten the bronze jaws of the center rest chuck just enough to remove looseness but not enough to cause a "drag." Lock the jaws securely in position by turning the collar. IMPORTANT: During the turning operation apply plenty of lubricant on the shaft at the point of bearing with the jaws of the center rest chuck.

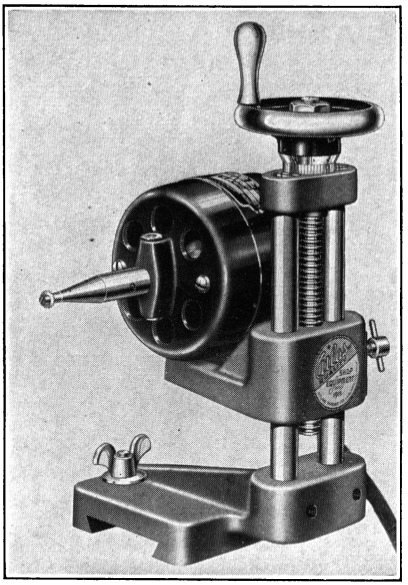

FIG. 237. Motor Driven Mica Undercutter.

THE TRUEING CUT

The trueing cut must be smooth and even, so as to prevent sparking at the armature brushes. There are several methods of grinding tool bits for the trueing cut. The tool shown in Figure 239 has been found satisfactory by many auto repair mechanics. Grind the tool bit to the angles indicated—hone it thoroughly at regular intervals.

Set up the gear train for a fine feed—the three feeds in Table II, page 130 are recommended. Take light cuts with a surface speed of 200 to 300 feet per minute (Figs. 56 and 55).

UNDERCUTTING MICA

The motor driven undercutting attachment shown in Figure 237 is recommended for the undercutting operation. The base is clamped to the cross slide dovetail and is put into action without removing the tool post.

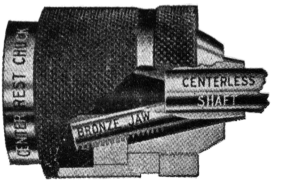

FIG. 238
Jacobs Center Rest Chuck.

After the trueing cut, choose an undercutting saw which is the

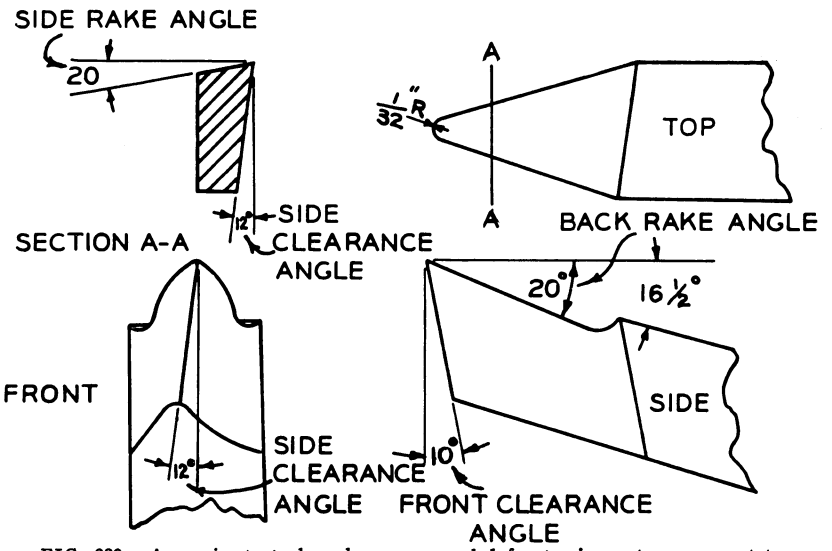

FIG. 239. Approximate tool angles recommended for trueing cut on commutator.

same width as the commutator slot. Mount saw on cutter arbor. Adjust undercutter so that saw is exactly on the lathe center line and in position to take a cut of about the same depth as the width of the slot. Start the undercutter motor and feed the saw through the mica with the carriage handwheel—hold the armature with the left hand and be careful not to cut into the copper segments. The carriage stop (page 164) aids in cutting each slot exactly the same length. Repeat undercutting for each slot, rotating armature by hand.

To polish commutator after undercutting: Take a very light turning cut across the commutator. Then sand with a strip of No. 1/0 or 2/0 sand paper or flint paper about the same width as the commutator (never use emery or carborundum paper). Do not hold the paper against the commutator with the fingers, but use a strip long enough so that an end can be held in each hand.

TAPER TURNING ON THE ATLAS LATHE

Tapers are cut in one of three ways: (1) with the taper cutting attachment, (2) by setting over the tailstock center and (3) by feeding in at an angle with the compound rest feed. These methods are described in detail in the following paragraphs. The taper cutting attachment is considered the most satisfactory of these methods because it increases accuracy, eliminates computation and simplifies repeat operations.

IMPORTANT: When cutting tapers, always set the point of the tool bit on the exact lathe center line.

TAPER PER FOOT

The difference between the diameters of the two ends of a tapered piece of work, expressed in inches per foot of length, is known as "Taper per Foot."

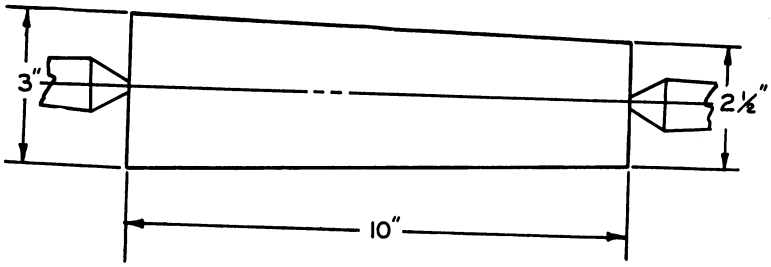

FIG. 240. Taper showing dimensions—see text below.

EXAMPLE: Figure 240 shows a taper with a diameter of 3 inches at one end and 2½ inches at the other.

Difference in diameters = .500 inch.

Length of taper = 10 inches = $\frac{10}{12}$ foot.

Then, taper per foot = $.500 \div \frac{10}{12} = .600$ inch.

FORMULAS:

$$\text{Taper per foot (in inches)} = \frac{\text{Large diameter} - \text{Small diameter}}{\text{Length in feet}}$$

$$= \frac{12\ (\text{Large diameter} - \text{Small diameter})}{\text{Length in inches}}$$

$$\text{Taper per inch (in inches)} = \frac{\text{Large diameter} - \text{Small diameter}}{\text{Length in inches}}$$

CALCULATING ANGLE OF COMPOUND REST

The Atlas compound rest can be swivelled and locked at any angle, and is ideal for cutting short tapers, taking angular cuts up to 2¼ inches in length, and boring tapered holes. When the desired taper is expressed in degrees and minutes, the angle is simply transferred to the proper side of the 90° reading on the graduated base of the compound rest (compound rest reading is exactly one-half of total included angle of taper). When the taper is expressed in inches per foot, convert this figure into degrees and minutes, first finding the tangent of the desired angle as follows:

$$\text{Tangent of Angle} = \frac{\text{Taper per Foot in Inches}}{24}$$

Then consult the tangent tables in any machinists handbook (see page 186) to obtain the equivalent of this tangent in degrees and minutes.

EXAMPLE: To set compound rest at proper angle to cut a standard No. 2 Morse Taper.

The No. 2 Morse Taper has a taper per foot of .59941 inch (Table XXX). The tangent of required angle is $\frac{.59941}{24} = .024975$. Referring to tangent table (page 186): .024975 is the tangent of an angle of 1 degree, 26 minutes or slightly less than 1½ degrees. Therefore, the correct compound rest setting is 1° 26′ from the 90° reading.

CALCULATING TAILSTOCK SETOVER

Figures 241 and 243 show how tapers are cut by setting over the tailstock. Figure 243 shows how to determine the proper direction of tailstock setover. Setting the tailstock forward (toward tool post) results in a taper with the smaller diameter at the tailstock end of the work. Setting the tailstock backward (away from the tool post) results in a smaller diameter at the headstock end of the work.

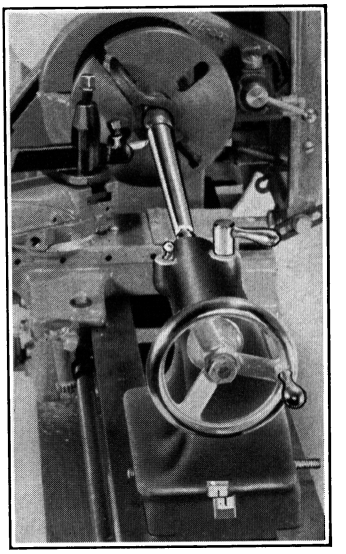

FIG. 241
Tapering with tailstock set over.

In determining the proper amount of tailstock setover, bear in mind that the amount of tailstock setover varies with the length of the piece being tapered—the tailstock must be reset in order to cut the same taper on pieces of different lengths. Use these formulas (S = Setover in inches):

(1) When Taper per Foot is given:—

$$S = \frac{\text{Taper per Foot} \times \text{Length of Taper in Inches}}{24}$$

(2) When entire length of piece is to be tapered and the diameters at ends of tapers are given:—

$$S = \frac{\text{Large Diameter} - \text{Small Diameter}}{2}$$

(3) When a portion of piece is to be tapered and the diameters at ends of the tapered portion are given[1]:—

$$S = \frac{\text{Total Length of Work}}{\text{Length to be Tapered}} \times \frac{\text{Large Diameter} - \text{Small Diameter}}{2}$$

[1] A taper of more than 1 inch per foot on stock 6 inches or less in length is usually cut by tapering only a portion of a longer piece of work and removing the waste stock after the taper is completed. This method avoids a small inaccuracy which would otherwise result, since, after the tailstock has been set over, the angle of the lathe centers does not match exactly the angle of the countersunk holes in the work.

FIGURE 242 — TABLE OF TANGENTS

As explained on page 185, a table of tangents is essential in converting taper per foot into degrees and minutes when calculating the proper setting of the compound rest for taper cutting. In the table below, tangents are listed for every 15 minutes of angle. To obtain angles for intermediate tangents, use interpolation. For example: The tangent of the taper in the example on page 185 is .024975, which is between the tangent readings of 1° 15′ and 1° 30′. The exact reading is obtained as follows:

$$.02618 - .02182 = .00436$$
$$.024975 - .02182 = .003155$$
$$\frac{.003155}{.00436} \times 15 \text{ min.} = 11 \text{ min.}$$

1 deg. 15 min. + 11 min. = 1 deg. 26 min., *required angle.*

Degrees	Minutes	Tangent	Degrees	Minutes	Tangent	Degrees	Minutes	Tangent
0	0	.00000	13	0	.23087	26	0	.48773
	15	.00436		15	.23547		15	.49314
	30	.00873		30	.24008		30	.49858
	45	.01309		45	.24470		45	.50404
1	0	.01745	14	0	.24933	27	0	.50952
	15	.02182		15	.25397		15	.51503
	30	.02618		30	.25862		30	.52057
	45	.03055		45	.26328		45	.52612
2	0	.03492	15	0	.26795	28	0	.53171
	15	.03929		15	.27263		15	.53732
	30	.04366		30	.27732		30	.54295
	45	.04803		45	.28203		45	.54862
3	0	.05241	16	0	.28674	29	0	.55431
	15	.05673		15	.29147		15	.56003
	30	.06116		30	.29621		30	.56577
	45	.06554		45	.30096		45	.57155
4	0	.06993	17	0	.30573	30	0	.57735
	15	.07431		15	.31051		15	.58318
	30	.07870		30	.31530		30	.58904
	45	.08309		45	.32010		45	.59494
5	0	.08749	18	0	.32492	31	0	.60086
	15	.09189		15	.32975		15	.60681
	30	.09629		30	.33459		30	.61280
	45	.10069		45	.33945		45	.61882
6	0	.10510	19	0	.34433	32	0	.62487
	15	.10952		15	.34921		15	.63095
	30	.11393		30	.35412		30	.63707
	45	.11836		45	.35904		45	.64322
7	0	.12273	20	0	.36397	33	0	.64941
	15	.12722		15	.36892		15	..65563
	30	.13165		30	.37388		30	.66188
	45	.13609		45	.37887		45	.66818
8	0	.14054	21	0	.38386	34	0	.67451
	15	.14499		15	.38888		15	.68087
	30	.14945		30	.39391		30	.68728
	45	.15391		45	.39896		45	.69372
9	0	.15838	22	0	.40403	35	0	.70021
	15	.16286		15	.40911		15	.70673
	30	.16734		30	.41421		30	.71329
	45	.17183		45	.41933		45	.71990
10	0	.17633	23	0	.42447	36	0	.72654
	15	.18083		15	.42963		15	.73323
	30	.18534		30	.43481		30	.73996
	45	.18985		45	.44001		45	.74673
11	0	.19438	24	0	.44523	37	0	.75355
	15	.19891		15	.45047		15	.76042
	30	.20345		30	.45573		30	.76733
	45	.20800		45	.46101		45	.77428
12	0	.21256	25	0	.46631	38	0	.78128
	15	.21712		15	.47163		15	.78834
	30	.22169		30	.47697		30	.79543
	45	.22628		45	.48234		45	.80258

Degrees	Minutes	Tangent
39	0	.80978
	15	.81703
	30	.82434
	45	.83169
40	0	.83910
	15	.84656
	30	.85408
	45	.86165
41	0	.86929
	15	.87698
	30	.88472
	45	.89253
42	0	.90040
	15	.90834
	30	.91633
	45	.92439
43	0	.93251
	15	.94071
	30	.94896
	45	.95729
44	0	.96569
	15	.97416
	30	.98270
	45	.99131
45	0	1.0000
	15	1.0088
	30	1.0176
	45	1.0265
46	0	1.0355
	15	1.0446
	30	1.0538
	45	1.0630
47	0	1.0724
	15	1.0818
	30	1.0913
	45	1.1009
48	0	1.1106
	15	1.1204
	30	1.1303
	45	1.1403
49	0	1.1504
	15	1.1605
	30	1.1708
	45	1.1812
50	0	1.1917
	15	1.2024
	30	1.2131
	45	1.2239
51	0	1.2349
	15	1.2460
	30	1.2572
	45	1.2685
52	0	1.2799
	15	1.2915
	30	1.3032
	45	1.3151
53	0	1.3270
	15	1.3392
	30	1.3514
	45	1.3638
54	0	1.3764
	15	1.3891
	30	1.4019
	45	1.4150
55	0	1.4281
	15	1.4415
	30	1.4550
	45	1.4687
56	0	1.4826
	15	1.4966
	30	1.5108
	45	1.5252
57	0	1.5399
	15	1.5547
	30	1.5697
	45	1.5849
58	0	1.6003
	15	1.6160
	30	1.6318
	45	1.6479
59	0	1.6643
	15	1.6808
	30	1.6977
	45	1.7147
60	0	1.7320
	15	1.7496
	30	1.7675
	45	1.7856
61	0	1.8040
	15	1.8227
	30	1.8418
	45	1.8611
62	0	1.8807
	15	1.9007
	30	1.9210
	45	1.9416
63	0	1.9626
	15	1.9840
	30	2.0057
	45	2.0278
64	0	2.0503
	15	2.0732
	30	2.0965
	45	2.1203
65	0	2.1445
	15	2.1692
	30	2.1943
	45	2.2199
66	0	2.2460
	15	2.2727
	30	2.2998
	45	2.3276
67	0	2.3558
	15	2.3847
	30	2.4142
	45	2.4443
68	0	2.4751
	15	2.5065
	30	2.5386
	45	2.5715
69	0	2.6051
	15	2.6394
	30	2.6746
	45	2.7106
70	0	2.7475
	15	2.7852
	30	2.8239
	45	2.8636
71	0	2.9042
	15	2.9459
	30	2.9887
	45	3.0326
72	0	3.0777
	15	3.1240
	30	3.1716
	45	3.2205
73	0	3.2708
	15	3.3226
	30	3.3759
	45	3.4308
74	0	3.4874
	15	3.5457
	30	3.6059
	45	3.6679
75	0	3.7320
	15	3.7983
	30	3.8667
	45	3.9375
76	0	4.0108
	15	4.0867
	30	4.1653
	45	4.2468
77	0	4.3315
	15	4.4194
	30	4.5107
	45	4.6057
78	0	4.7046
	15	4.8077
	30	4.9151
	45	5.0273
79	0	5.1445
	15	5.2671
	30	5.3955
	45	5.5301
80	0	5.6713
	15	5.8196
	30	5.9758
	45	6.1402
81	0	6.3137
	15	6.4971
	30	6.6911
	45	6.8969
82	0	7.1154
	15	7.3479
	30	7.5957
	45	7.8606
83	0	8.1443
	15	8.4489
	30	8.7769
	45	9.1309
84	0	9.5144
	15	9.9310
	30	10.385
	45	10.883
85	0	11.430
	15	12.035
	30	12.706
	45	13.457
86	0	14.301
	15	15.257
	30	16.350
	45	17.610
87	0	19.081
	15	20.819
	30	22.904
	45	25.452
88	0	28.636
	15	32.730
	30	38.188
	45	45.829
89	0	57.290
	15	76.390
	30	114.59
	45	229.18

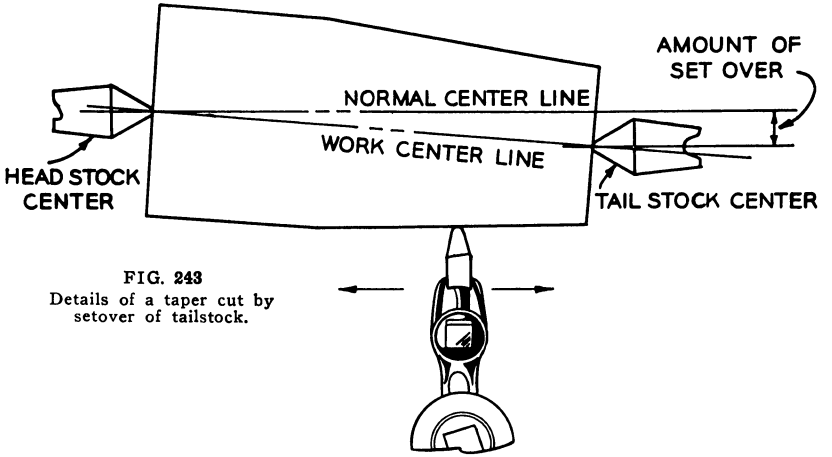

FIG. 243
Details of a taper cut by setover of tailstock.

SETTING OVER THE TAILSTOCK

To set over the tailstock, first loosen the tailstock clamping nut. The upper part of the tailstock is locked in position by tightening two headless set screws, one in the front and one in the back of the base casting (see Fig. 245). Loosen the headless set screw on the side toward which the tailstock will be moved. Then the upper tailstock will move in that direction when the other headless set screw is tightened. The index line at the handwheel end of the tailstock indicates the approximate amount of setover (see Figs. 241 and 245).

Figure 244 shows how to measure the amount of tailstock setover. The tailstock is moved close to the headstock, and a steel

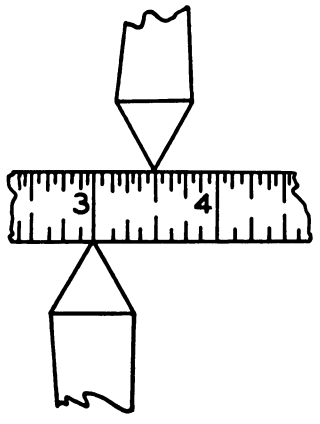

FIG. 244
Measuring amount of tailstock setover.

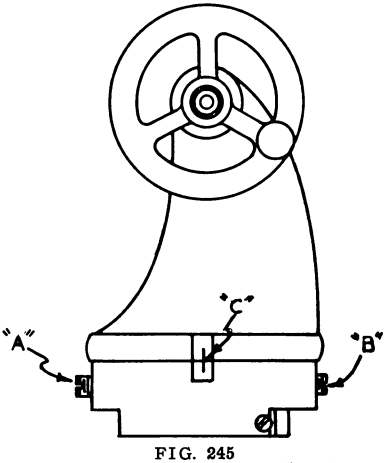

FIG. 245
Handwheel end of tailstock showing index line "C" and headless set screws "A" and "B".

scale, graduated at both edges is held in position for taking the measurement. A proper scale for work of this type is shown in Figure 246. When the tailstock is in position, tighten the tailstock clamping nut.

FIG. 246. Flexible steel rule graduated on two edges. Handy for measuring tailstock setover.

REALIGNING THE TAILSTOCK AFTER TAPER WORK

To restore alignment of tailstock with headstock, loosen tailstock clamping nut and adjust headless set screws until index line indicates that tailstock is in approximate position.

Figure 247 shows how to find the exact position of the tailstock. The check bar mounted between centers is between 12 and 15 inches long and has a shoulder at each end as indicated. A light cut is taken at "A" and "B" and the two diameters are measured with a micrometer. Then:

If the diameter of tailstock shoulder "B" is MORE than the diameter of headstock shoulder "A," the tailstock must be moved FORWARD a distance of half the difference in diameters.

If the diameter of tailstock shoulder "B" is LESS than the diameter of headstock shoulder "A," the tailstock must be moved BACKWARD a distance of half the difference in diameters.

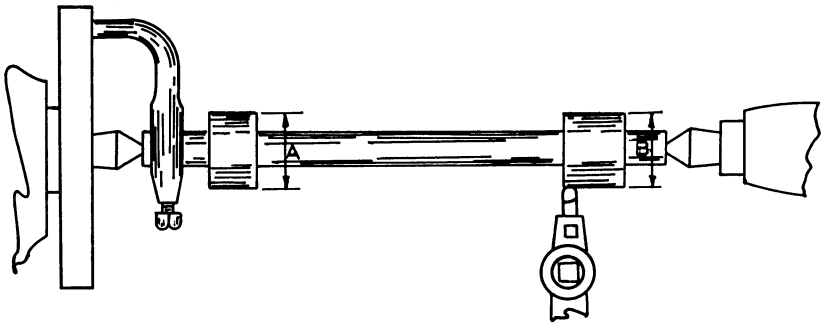

FIG. 247. Check bar for checking alignment of lathe centers. See text above.

The alignment of lathe centers should be checked at regular intervals, so as to maintain accuracy of long cuts. A long cut on a straight bar is sometimes taken instead of the two short cuts on the shoulders of the check bar. A check bar like the one above, however, is a much more rapid method of making the alignment test.

THE TAPER CUTTING ATTACHMENT

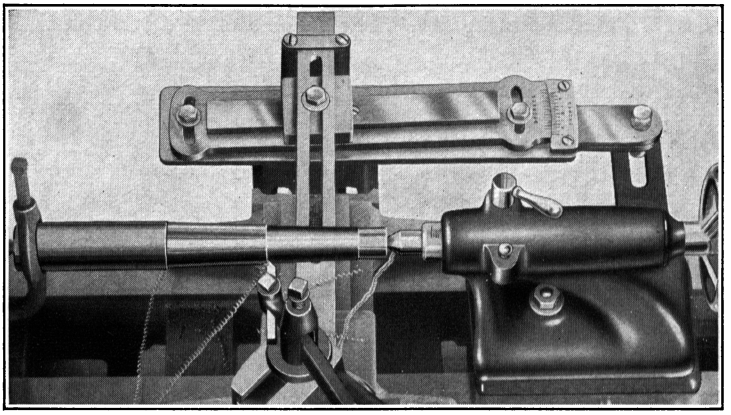

FIG. 248. Taper Cutting Attachment in Operation.

The taper cutting attachment shown in Figure 248 has many advantages over the tailstock setover method. Lathe centers are never taken out of alignment; bearing surfaces of the lathe centers are not affected; duplicate tapers may be cut quickly on pieces of different length; and taper boring, impossible with tailstock setover, is handled quickly and easily (Fig. 249). The slide bar is graduated in degrees and taper per foot (in inches), simplifying computation and setting.

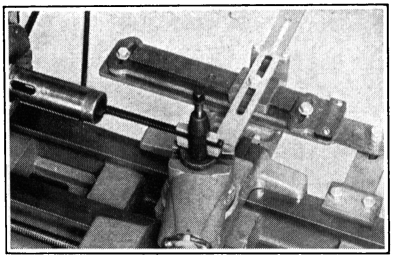

FIG. 249. Boring a Tapered Hole.

The dovetail slide bar is installed parallel to the bed way and set at the desired angle. A slotted draw bar connects the slide bar and the carriage cross slide, guiding the cutting operation.

ASSEMBLING THE TAPER CUTTING ATTACHMENT

Refer to Figure 250.

All recent 9 and 10 series Atlas Lathe carriages have a carefully finished pad which is ready-tapped to receive the taper cutting attachment[1]. Remove slotted draw bar "A" and attach the guide bracket "B" to the carriage with the two 3/8" x 1" cap screws fur-

[1] To mount the taper cutting attachment on earlier Atlas lathes, face a portion of the back of the carriage by end milling or filing carefully. The finished portion should be slightly larger than the face of the guide bracket ("B" in Fig. 250). Drill and tap the two necessary holes (see end view, Fig. 250).

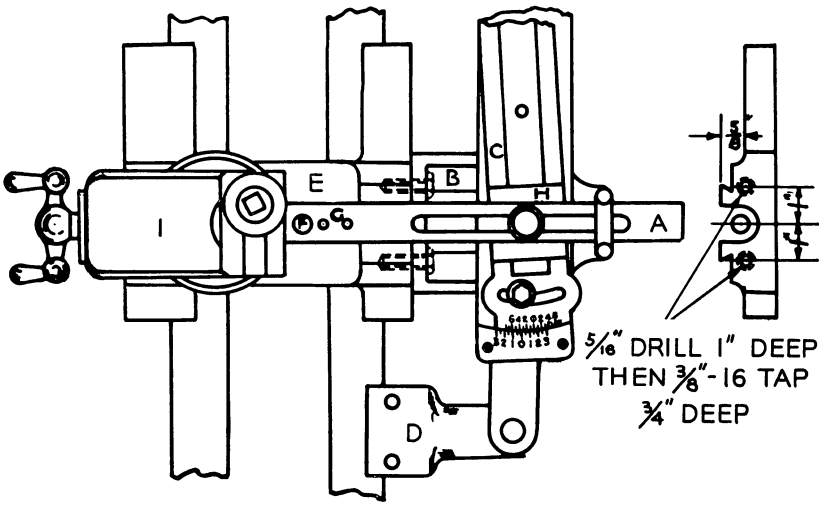

FIG. 250. Details of Taper Cutting Attachment.

nished. Replace draw bar. Both top and side surfaces of the slide bar "C" must be parallel with the lathe bed ways when the bar graduations are set at zero. Check this adjustment with a dial indicator to insure maximum accuracy. If necessary, place shims between guide bracket "B" and carriage.

Clamp the arm "D" at desired position on back edge of bed way. The taper cutting attachment is now ready for operation.

OPERATING THE TAPER CUTTING ATTACHMENT

(1) Remove cross feed screw guard and turn screw until brass nut is removed. Then remove machine screw holding nut in place and remove nut through bottom of guide bracket "D."

(2) Move cross slide so that tool is close to work. Connect draw bar to cross slide by inserting small knurled plug "F" in hole formerly filled by brass nut and securing it with machine screw "G."

(3) Swivel and clamp dovetail slide bar at proper angle, and clamp draw bar to slide block "H" by tightening screw. Graduations read in degrees on the swivel bar and in inches per foot on the pad. These readings show included angle, which is double the angle between the side of the work and the center line.

(4) Set compound rest at a right angle to the bed ways and feed in tool with compound rest feed. Clamp arm "D" in position so that slide block "H" travels in center portion of slide bar.

CAUTION: Never allow the slide block "H" to strike the cap screws at the ends of the slide bar.

Ordinarily, no computation is necessary in setting the taper cutting attachment. When the large and small diameters are specified for a certain length, apply the formula on page 185.

CHECKING STANDARD TAPERS

In cutting standard tapers such as those shown in Figures 251 and 252, the taper should be checked in a standard socket before the last cuts are taken. In making this check, make a light mark along the entire length of the taper with chalk or Prussian Blue and insert in a standard socket. Twist the taper and remove. If the entire length of the chalk line has been rubbed off, the taper is being cut at the proper angle and the finish cuts may be taken. If a portion of the chalk line has been left untouched, the taper setting is not correct. Make the necessary changes and repeat checking until the entire length of the chalk line is rubbed out.

Sockets to fit standard tapers should be cut to approximate size and reamed with a standard taper reamer. Arbors should be finish-ground with the tool post grinder (page 172) to avoid damaging the taper socket.

BROWN AND SHARPE TAPERS

Figure 251 shows standard Brown and Sharpe taper dimensions. Each of the tapers, except the No. 10, requires a taper per foot of .500 inch. The No. 10 has a taper of .5161 inch per foot. Take cuts until the diameter at the small end is equal to the dimension given in the table on page 193.

MORSE TAPERS

Standard Morse Taper dimensions are shown in Figure 252. The taper per foot varies for each size. When cutting Morse Tapers, it is preferable to set the lathe for the proper taper per foot, rather than to measure the large and small diameters.

IMPORTANT!

When cutting tapers, always have the point of the tool bit on the exact lathe center line. Be sure to check the taper in a standard socket before the final cuts are taken.

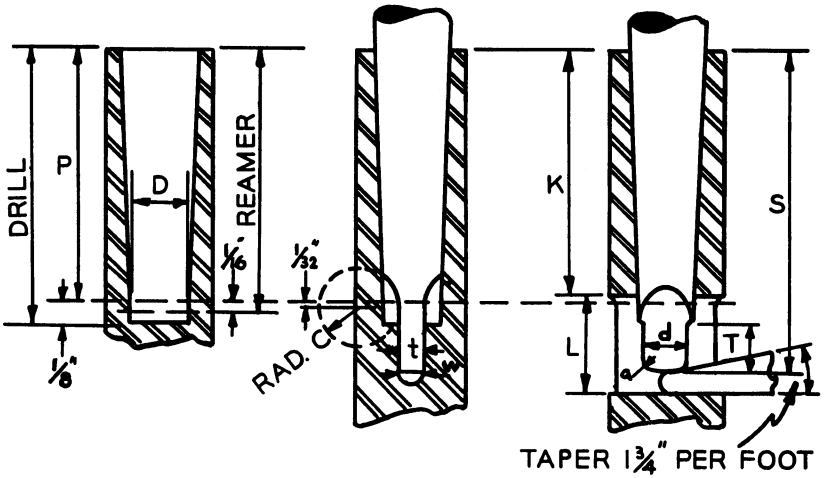

FIG. 251. BROWN AND SHARPE TAPERS
Taper approximates 1/2" per ft. except No. 10 which is .5161" per ft.

TABLE XXIX — BROWN & SHARPE TAPERS

No. of Taper	Diam. of Plug at Small End	Plug Depth P B & S Standard*	Keyway from End of Spindle	Shank Depth	Length of Keyway†	Width of Keyway	Length of Arbor Tongue	Diameter of Arbor Tongue	Thickness of Arbor Tongue	Radius of Tongue Circle	Radius of Tongue at a	Limit for Tongue —to project thru Test Tool
	D	*P*	*K*	*S*	*L*	*W*	*T*	*d*	*t*	*C*	*a*	
1	.200	15/16	15/16	1 3/16	3/8	.135	3/16	.170	1/8	3/16	.030	.003
2	.250	1 3/16	1 11/64	1 1/2	1/2	.166	1/4	.220	5/32	1/16	.030	.003
3	.312	1 1/2	1 15/32	1 7/8	5/8	.197	5/16	.282	3/16	3/16	.040	.003
4	.350	1 11/16	1 41/64	2 3/32	11/16	.228	11/32	.320	7/32	5/16	.050	.003
5	.450	2 1/8	2 1/16	2 9/16	3/4	.260	3/8	.420	1/4	5/16	.060	.003
6	.500	2 3/8	2 19/64	2 7/8	7/8	.291	7/16	.460	9/32	5/16	.060	.005
7	.600	2 7/8	2 25/32	3 13/32	15/16	.322	15/32	.560	5/16	3/8	.070	.005
8	.750	3 9/16	3 29/64	4 1/8	1	.353	1/2	.710	11/32	3/8	.080	.005
9	.900	4 1/4	4 1/8	4 7/8	1 1/8	.385	9/16	.860	3/8	7/16	.100	.005
10	1.0446	5	4 27/32	5 23/32	1 5/16	.447	21/32	1.010	7/16	7/16	.110	.005
11	1.250	5 15/16	5 25/32	6 21/32	1 5/16	.447	21/32	1 210	7/16	1/2	.130	.005
12	1.500	7 1/8	6 15/16	7 15/16	1 1/2	.510	3/4	1.460	1/2	1/2	.150	.005
13	1.750	7 3/4	7 9/16	8 9/16	1 1/2	.510	3/4	1.710	1/2	5/8	.170	.010
14	2.00	8 1/4	8 1/32	9 5/32	1 11/16	.572	27/32	1 960	9/16	3/4	.190	.010
15	2.25	8 3/4	8 17/32	9 21/32	1 11/16	.572	27/32	2.210	9/16	7/8	.210	.010
16	2.50	9 1/4	9	10 1/4	1 7/8	.635	15/16	2.450	5/8	1	.230	.010
17	2.75	9 3/4										
18	3.00	10 1/4										

* "B & S Standard" Plug Depths are not used in all cases.
† Special lengths of keyway are used instead of standard lengths in some places. Standard lengths need not be used when keyway is for driving only and not for admitting key to force out tool.

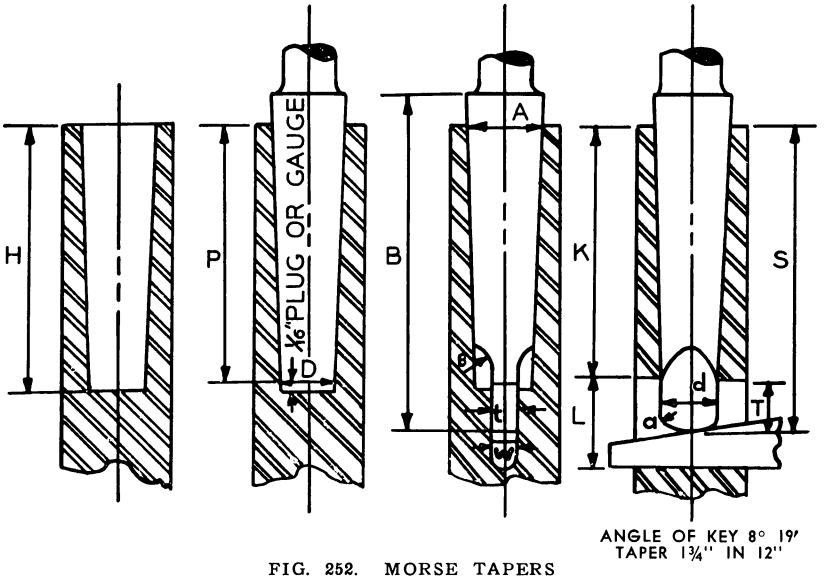

FIG. 252. MORSE TAPERS

TABLE XXX — MORSE TAPERS

Number of Taper	Diam. of Plug at Small End, Inches	Diam. at End of Socket, Inches	SHANK: Whole Length of Shank, Inches	SHANK: Shank Depth, Inches	Depth of Hole, Inches	Standard Plug Depth, Inches	TONGUE: Thickness of Tongue, Inches	TONGUE: Length of Tongue, Inches	TONGUE: Rad. of Mill for Tongue, Inches	TONGUE: Diameter of Tongue, Inches	TONGUE: Radius of Tongue, Inches	KEYWAY: Width of Keyway, Inches	KEYWAY: Length of Keyway, Inches	KEYWAY: End of Socket to Keyway, Inches	Taper per Foot	Taper per Inch	Number of Key
	D	*A*	*B*	*S*	*H*	*P*	*t*	*T*	B	*d*	*a*	*w*	*L*	*K*			
0	.252	.3561	2 11/32	2 7/32	2 1/32	2	5/32	1/4	5/32	.235	.04	.160	9/16	1 1/8	.62460	.05205	0
1	.369	.475	2 9/16	2 7/16	2 3/16	2 1/8	13/64	3/8	5/16	.343	.05	.213	3/4	2 1/16	.59858	.04988	1
2	.572	.700	3 1/8	2 15/16	2 5/8	2 1/16	1/4	7/16	1/4	17/32	.06	.260	7/8	2 1/2	.59941	.04995	2
3	.778	.938	3 7/8	3 11/16	3 1/4	3 3/16	5/16	9/16	9/32	23/32	.08	.322	1 1/8	3 1/16	.60235	.05019	3
4	1.020	1.231	4 7/8	4 5/8	4 1/8	4 1/16	15/32	5/8	5/16	31/32	.10	.478	1 1/4	3 7/8	.62326	.05193	4
5	1.475	1.748	6 1/8	5 7/8	5 1/4	5 3/16	5/8	3/4	3/8	1 13/32	.12	.635	1 1/2	4 15/16	.63151	.05262	5
6	2.116	2.494	8 3/8	8 1/4	7 3/8	7 1/4	3/4	1 1/16	1/2	2	.15	.760	1 3/4	7	.62565	.05213	6
7	2.750	3.270	11 5/8	11 1/4	10 1/8	10	1 1/8	1 3/8	3/4	2 5/8	.18	1.135	2 5/8	9 1/2	.62400	.05200	7

TABLE XXXI — TAPERS AND ANGLES

Taper Per Foot	Included Angle Deg.	Min.	With Center Line Deg.	Min.	Taper Per Inch	Taper Per Inch from Center Line
1/8	0	36	0	18	.010416	.005203
3/16	0	54	0	27	.015625	.007812
1/4	1	12	0	36	.020833	.010416
5/16	1	30	0	45	.026042	.013021
3/8	1	47	0	53	.031250	.015625
7/16	2	05	1	02	.036458	.018229
1/2	2	23	1	11	.041667	.020833
9/16	2	42	1	21	.046875	.023438
5/8	3	00	1	30	.052084	.026042
11/16	3	18	1	39	.057292	.028646
3/4	3	25	1	47	.062500	.031250
13/16	3	52	1	56	.067708	.033854
7/8	4	12	2	06	.072917	.036456
15/16	4	28	2	14	.078125	.039063
1	4	45	2	23	.083330	.041667
1 1/4	5	58	2	59	.104666	.052084
1 1/2	7	08	3	34	.125000	.062500
1 3/4	8	20	4	10	.145833	.072917
2	9	32	4	46	.166666	.083332
2 1/2	11	54	5	57	.208333	.104166
3	14	16	7	08	.250000	.125000
3 1/2	16	36	8	18	.291666	.145833

TURRET ATTACHMENTS

The attachments shown in Figure 253 convert the Atlas Lathe into a small screw machine for the manufacture of small parts on a production basis. Figure 254 shows a few parts which can be made in this manner.

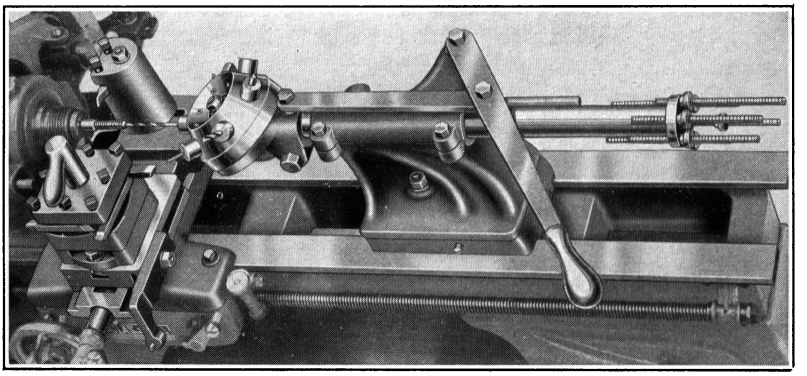

FIG. 253. Turret Attachments in Operation.

The tailstock turret head (Fig. 255) accommodates tools for six different operations. A typical set-up would include such operations as setting length of stock, countersinking, drilling, tapping and chamfering. When the feed lever is returned to the extreme right, the turret head is automatically unlocked so that the proper tool may be moved into position.

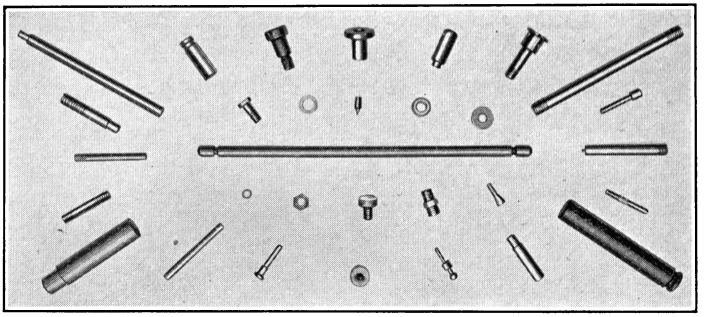

FIG. 254. Small parts which can be made on a production basis on an Atlas Lathe equipped with turret attachments.

The cross carriage turret attachment (Fig. 256) includes a 4-way tool post turret and back slide tool post. The double tool cross slide is required to adapt these two units to the carriage cross slide dovetails. The 4-way tool post permits four separate operations such

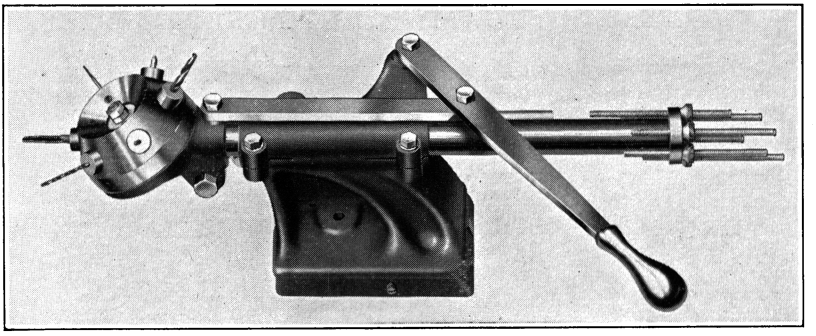

FIG. 255. Tailstock Turret.

as grooving, threading, facing and turning. The lock handle releases the head so that it may be rotated quickly to the next operating position. The back slide provides an additional operation, usually cutting-off.

The Atlas Engineering Department is prepared to recommend the proper tools and attachments for industrial turret jobs. When requesting information, send sample parts, or sketches and principal specifications.

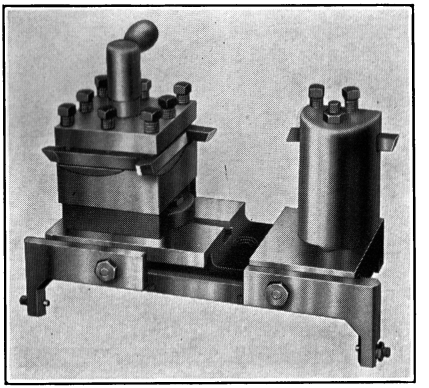

FIG. 256. Cross Carriage Turret.

LINE-SHAFT CLUTCH FOR V-BELT DRIVE

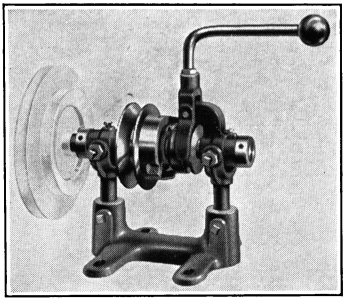

FIG. 257. V-type Pulley Clutch.

The Vee-type pulley clutch shown in Figures 257 and 258 is built especially for the shop with gas engine or line-shaft power drive and other suitable applications. The "split-pulley" is closed to engage belts or opened for idling by shifting the ball control handle. A ball bearing unit between the pulley flanges carries the belt during idling. Atlas Engineers will gladly recommend proper pulleys and belts for any line-shaft drive.

TYPICAL LINE SHAFT CLUTCH INSTALLATION

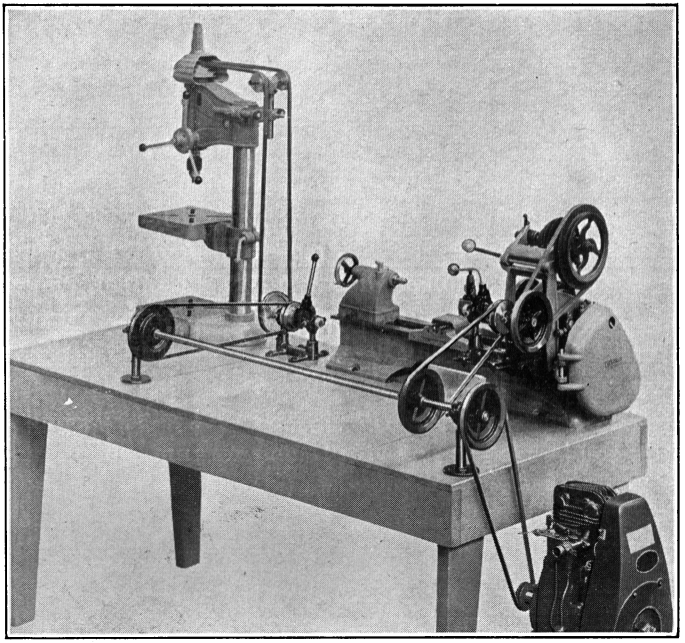

FIG. 258

Gas Engine Drive Using Two Clutches. One clutch is mounted directly on the table near the drill press; the second clutch is on the motor bracket at the rear of the lathe.

Part 9

WOODTURNING
ON THE METAL LATHE

PART 9

WOODTURNING ON THE METAL LATHE

The heavy, rigid construction of the Atlas headstock, tailstock and bed provides the strength essential for all types of woodturning operations. The higher speeds (pages 47 and 230) are satisfactory for many types of woodworking and are obtained with a 1740 R.P.M. motor. The standard high speed babbitt headstock bearings can be used for woodturning after the bearing cap screws are loos-

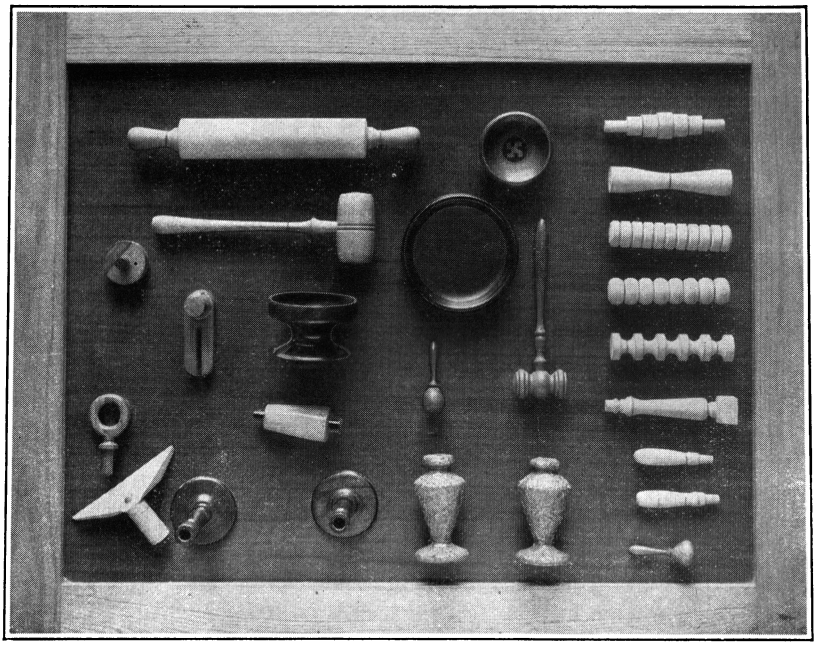

FIG. 259. Woodworking Projects.

ened as mentioned on page 10. *Oil these bearings thoroughly every time the lathe is used for woodturning.*

The attachments necessary for woodworking operations are described on page 200. Figure 259 shows a few woodturning projects.

A Timken-equipped Atlas Lathe (see page 11) is recommended for the shop handling quantities of both wood and metal turning. These bearings permit higher speeds up to 4,000 R.P.M. with a special jackshaft (No. L2-675), available at the Atlas factory. A

WOODWORKING ATTACHMENTS FOR THE METAL LATHE

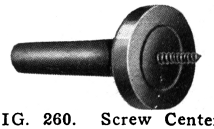

FIG. 260. Screw Center.

FIG. 261. Spur Center.

FIG. 262. Cup Center.

These three centers are companion pieces for wood turning on the metal lathe. Each center has a No. 2 Morse Taper shank. The screw center (Fig. 260) is mounted in the headstock for facing and hollowing operations. The spur center (Fig. 261) is used in the headstock to drive work mounted between lathe centers. The cup center (Fig. 262) acts as a dead center in the tailstock.

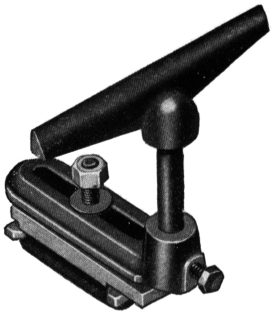

FIG. 263. Hand Rest.

The hand rest shown at the left clamps to the lathe bed and furnishes a rigid chisel support. "Tee rests" of various widths may be swivelled and locked in position for the turning operation. A 4 inch and 12 inch tee rest are furnished as standard.

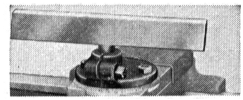

FIG. 264
Hand Rest Swivel.

This type of tool rest, called a "hand rest swivel," is mounted in place of the compound rest and can be shifted quickly to various bed positions with the carriage handwheel control. With the hand rest swivel, it is never necessary to remove the lathe carriage.

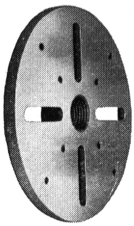

FIG. 265
Face Plate.

Figure 265 shows a face plate which is ideal for both wood and metal turning. It threads directly on the Atlas metal lathe headstock spindle and has 8 holes for wood screws and four ½-inch slots for metal work. A 3½-inch face plate for wood turning only is also available.

FIG. 266. Hand Tool Rest.

This type of tool rest is recommended when taking extra long cuts. Rests are available in 18 and 24 inch lengths, and are clamped to the lathe bed in two places.

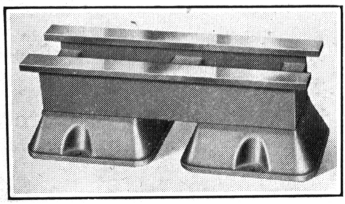

FIG. 267. Extension Bed.

The extension bed is used for handling extra long stock on the Atlas 9 or 10-series metal lathes. This attachment is designed for woodworking only.

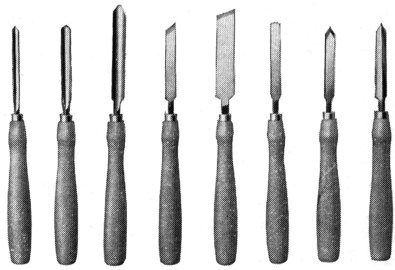

FIG. 268. Chisel Set.

This set of wood turning chisels is adequate to fill the needs of most small shops. It includes 3 gouges, 2 skew chisels, one round nose, one spear point and one parting tool.

Timken-equipped Atlas spindle will stand up for long periods without adjustments, even under heavy loads and at high speeds.

TYPES OF WOODS

(See pages 217 and 218)

The beginner in woodturning should learn about the various types of woods commonly used in lathe work. Softwoods such as white pine, red gum, and yellow poplar are easily worked; other woods of this type are birch, maple, walnut, mahogany and cherry. Oak, elm and ash are coarse grained woods and require especially careful turning. As a general rule, any medium-hard "decorative" wood is fairly easy to work. Plastics and dense hardwoods, such as ebony, are machined best by following the rules given in Part 4 (see page 64). With extreme care, plastics may be turned "free-hand" with the scraping type of woodworking tool used in face plate turning (page 214).

MOUNTING WORK BETWEEN CENTERS

When turning stock between centers, first locate the center on each end with reasonable accuracy. Square or regular-sized stock is centered by scribing lines across the ends from corner to corner. Round work is centered with the hermaphrodite caliper or center head attachment (see pages 69 and 70).

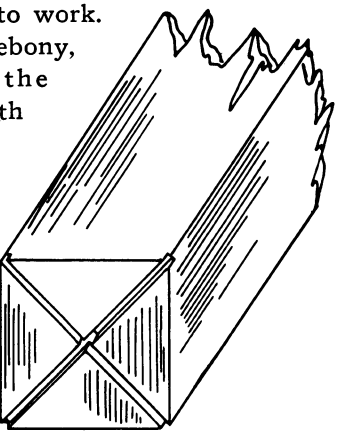

FIG. 269
Saw Cuts for Spur Center.

After locating the center, make two saw cuts about 1/8 inch deep in the headstock end of the work as shown in Figure 269. These grooves will intersect at the center. When turning especially hard woods, drill holes of about 1/16 inch diameter for center points. With the work resting on the bench, drive the spur center into the saw cuts with a mallet. Many lathe men keep an extra spur center on hand for this purpose. *Never drive the work against the spur center in the lathe—never force the work into the spur center by advancing the tailstock.*

Mount the spur center in the headstock and the cup center in the tailstock. Set the work in position against the spur center and advance cup center to tailstock end of work. Force point of cup

center into center of work just far enough to provide a firm bearing. Revolve work by hand to see if work turns freely; it it is too tight, back off the cup center slightly. Large pieces of square or rectangular stock will turn much more easily if the corner edges are planed before the work is mounted.

No. 10 motor oil or equivalent is an excellent lubricant for the tailstock center. However, since oil penetrates quickly into the work, it should be used only when there is plenty of waste stock at the tailstock end. With a small amount of waste stock, paraffin or beeswax is the best lubricant.

TURNING BETWEEN CENTERS

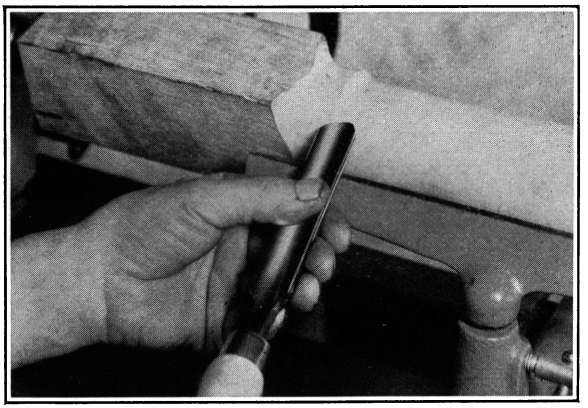

FIG. 270
Roughing out square stock with the large gouge.

The beginner should practice turning scrap stock between centers before attempting more difficult operations with expensive woods. The two most commonly used chisels, the gouge and skew (Figs. 271 and 274), can be handled in a satisfactory manner after a short period of practice and study.

There are two methods ordinarily used in wood turning operations: "paring" and "scraping." The paring method described in the following paragraphs, although the more difficult method, resembles more closely a true cutting action and usually results in a better class of work. The scraping method for face plate work is described on page 214.

TAKING THE CUT

As a general rule, the proper tool motion is *parallel with the grain of the work.* Always cut from the center toward the ends of the work—never start cuts at an end. When turning a taper, always cut toward the smaller diameter.

When taking the first cuts on rough stock, set the tool rest about 3/16 inch from the work and about 1/8 inch above the lathe

center line. Move the tool rest forward for each cut as the diameter of the work decreases. When using the skew chisels, set the tool rest 1/8 inch or less from the work and enough above center to permit a paring cut. After setting the tool rest, always revolve the work by hand to make sure there is sufficient clearance. *Never adjust the tool rest while the lathe is running.*

The top of the tool rest should be kept smooth and straight so that tools always slide easily. Dress it occasionally with a file.

THE LARGE GOUGE

The large gouge chisel (Fig. 271) is used to "rough down" the stock to what will be approximately its largest diameter when completed. Notice that, unlike the cabinet maker's "firmer gouge," the point is rounded. The ground face ("A" in Fig. 271) is always ground flat or with a slight curve outward, never hollow ground. When honing the gouge, always hold the chisel and the stone free in the hands. Continue honing until a feather edge is felt, then remove this edge by honing lightly on the inside with a slip stone.

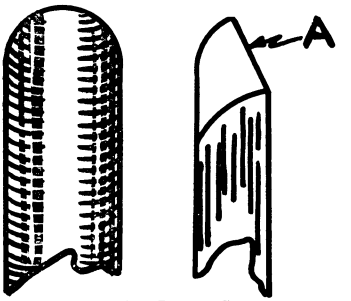

FIG. 271. Large Gouge.

Figures 272A and 272B show the proper method of holding the large gouge against the work. Grasp the chisel firmly, with one hand guiding the handle and the other holding the blade just behind the tool rest (Fig. 270). Move the gouge evenly along the work with the point of the tool ahead of the handle end. Take light cuts, and use slower lathe speeds when roughing out.

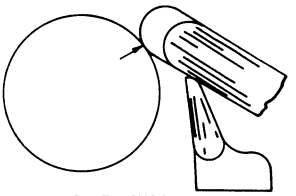

FIG. 272A

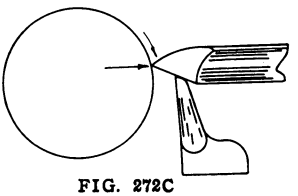

FIG. 272C

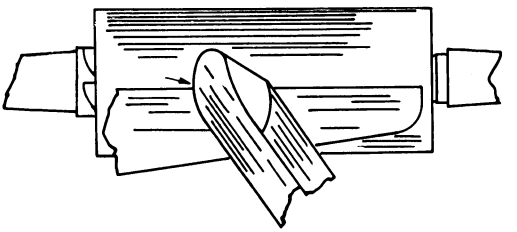

FIG. 272B

Figs. 272A and 272B show the correct position of the large gouge. When the tool is held as in Fig. 272C, the edge dulls quickly and is likely to hog into the work.

Experiment to find the best chisel position. Figure 272A shows how the gouge is held just past the point where the ground side rubs on the work. Raise the handle to obtain this position. Never hold the gouge as shown in Figure 272C. This position quickly dulls the cutting edge, produces rough work, and is very likely to split the stock.

Refer to Figure 304 for proper speeds for roughing cuts.

THE LARGE SKEW CHISEL

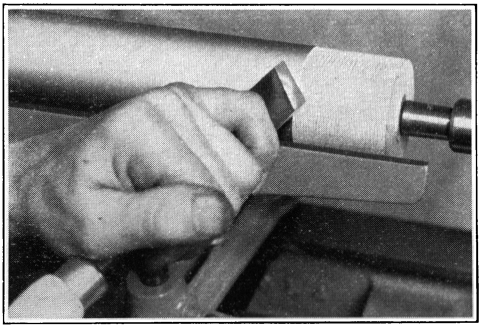

FIG. 273
Taking a finish cut with the large skew chisel.

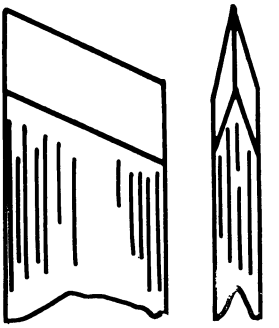

FIG. 274
Large Skew Chisel.

The large skew chisel (Fig. 274) is used for smooth cutting on cylindrical or long taper work. The cutting edge is "askew," or at an angle, and both side faces are ground to permit cuts to both the right and left.

When sharpening the large skew, the sides are ground off equally to an angle approximately equal to that shown in Figure 274. A finer cutting edge results in a cleaner cut, but becomes dull quicker than a large cutting angle. The ground surfaces should be flat—hollow grinding makes it difficult to hold the tool in the

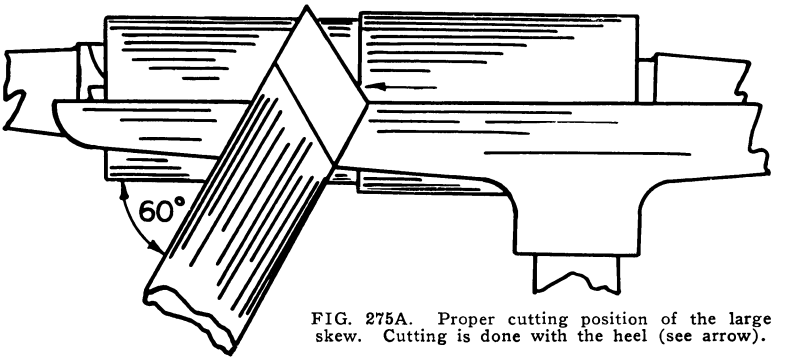

FIG. 275A. Proper cutting position of the large skew. Cutting is done with the heel (see arrow).

correct position. Hone carefully to a sharp point with no "wire edge."

Figures 275A and 275B show the proper way to hold the large skew when taking a cut. Lift the handle just enough to allow the edge to cut and so that the lower ground side of the chisel rubs lightly on the work and prevents "hogging-in."

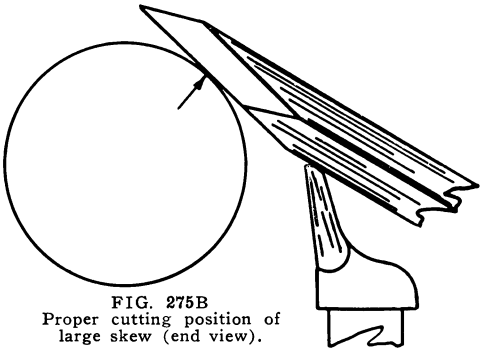

FIG. 275B
Proper cutting position of large skew (end view).

Properly used, the large skew gives a smooth finish requiring very little sanding. Always cut from the center toward an end of the work—never start cutting at an end.

USING THE BLOCK PLANE ON CYLINDRICAL WORK

Long cylinders or tapers can be smoothed down accurately with a small block plane. The plane is held at an angle of approximately 45 degrees with the axis of the work as shown in Figure 276. Light cuts give a clean, continuous shaving and a smooth surface.

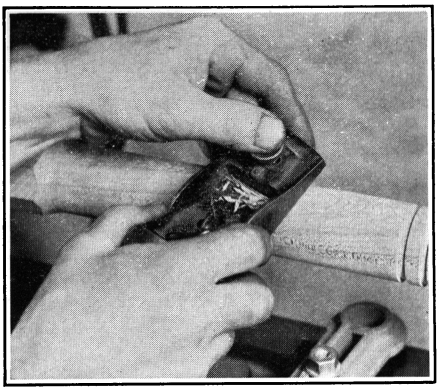

FIG. 276. Smoothing down work with the small block plane.

THE PARTING TOOL

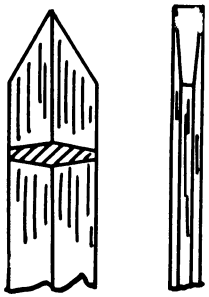

FIG. 277
Parting Tool.

The parting tool is used for two purposes: (1) for taking sizing cuts which serve as a guide in turning to size, and (2) for cutting off operations. Figure 277 shows the proper tool shape. The parting tool is a double wedge, wider at the center to provide clearance. The point is ground so that the cutting edge is on the *exact* center line of the tool. Grind the tool so that the sides are straight or slightly hollow-ground, then hone carefully. The cutting angle should be about 60°.

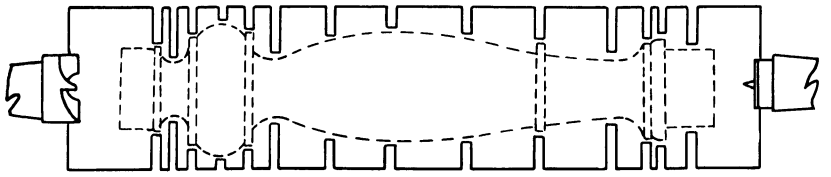

FIG. 278. Sizing grooves made with parting tool.

Figure 278 shows how the parting tool is used to cut grooves at various points of work which is to be turned to a required shape. Each groove is cut nearly as deep as the finish-diameter, allowing between 1/16 and 3/32 inch for finishing. The proper tool position is shown in Figure 280. Beginners should hold the tool with both hands and remove the tool when taking measurements with the caliper. *Do not cut too deep.* Experienced wood turners cut and caliper the sizing grooves at the same time (Fig. 279), a method which saves time and reduces the possibility of cutting the groove too deep.

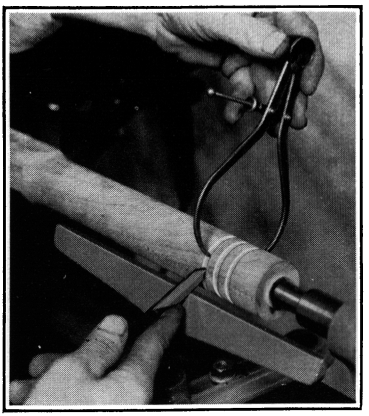

FIG. 279. Measuring the depth of a groove while it is being cut.

When using the parting tool for cutting off waste ends of the work, cut grooves at both ends so that the diameter is about ¼ inch at those points. Then cut the tailstock groove another ⅛ inch or slightly deeper. Now cut entirely through the headstock end and catch the work as it drops. The small skew chisel gives a smoother cutoff than the parting tool (see page 212). Some operators prefer to stop the lathe when the groove diameters are about ¼ inch and finish the cut-off with a saw.

The parting tool must be held carefully to prevent binding or "hogging-in." Figure 280 shows the proper tool position. Hold the chisel firmly and advance it into the work at a right angle to the center line. After a few prac-

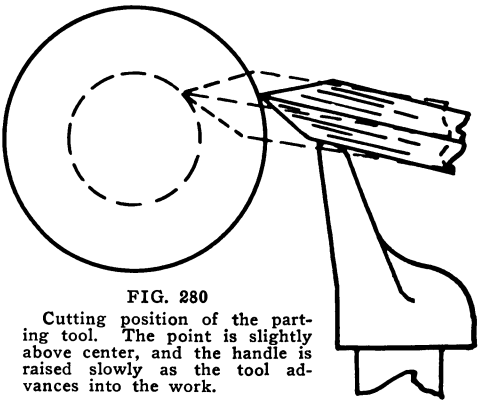

FIG. 280

Cutting position of the parting tool. The point is slightly above center, and the handle is raised slowly as the tool advances into the work.

tice cuts, the operator will get the proper "feel" of the parting tool and keep it automatically in the correct cutting position.

When taking deep cuts or cutting hardwood, the sides of the parting tool may rub enough to wedge and generate heat. Such jobs are simplified by taking two cuts and making a wider groove. Very high speeds are dangerous. *Never force the tool in too fast —hard woods may burn the point of the tool and spoil its temper.*

TYPES OF CUTS IN WOOD TURNING

In addition to cylindrical turning and taper work, there are three other common types of cuts in wood turning: V cuts, convex cuts (or beads), and concave or cove cuts. V cuts are made with the small skew or the "spear point" chisel. Convex cuts are made with the skew chisel; concave cuts with the gouge.

These three cuts are described in the following paragraphs. Experiment and practice until these cuts can be taken properly—they are used in almost every wood turning job.

TAKING VEE CUTS

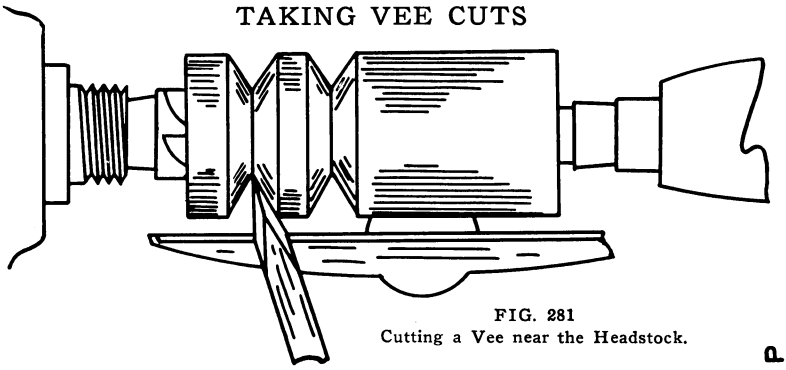

FIG. 281
Cutting a Vee near the Headstock.

Sharp vees are cut best with the small skew chisel, which is generally ground more askew than the large skew chisel (page 204). Figure 282 shows the proper method for starting the cut. After the work has been marked out, start the first groove with the heel of the tool. Then push down on the tool rest and raise the chisel handle, forcing the heel of the skew into the work. As the groove becomes deeper, be

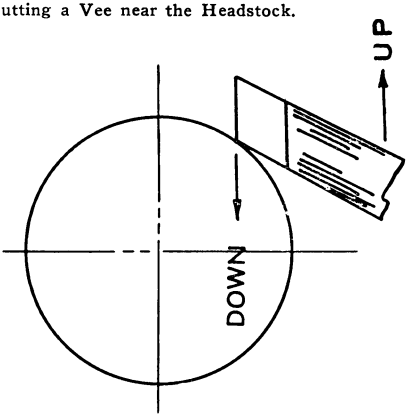

FIG. 282
Starting the groove for a vee cut.

careful to keep the unengaged portion of the cutting edge from "hogging-in." After cutting the groove, turn the chisel blade to the position shown in Figure 281 and cut the sides of the vee, first one side then the other, until reaching the proper depth. Never feed in the tool fast enough the burn the tool edge—be especially careful when turning hardwoods.

TAKING CONVEX CUTS

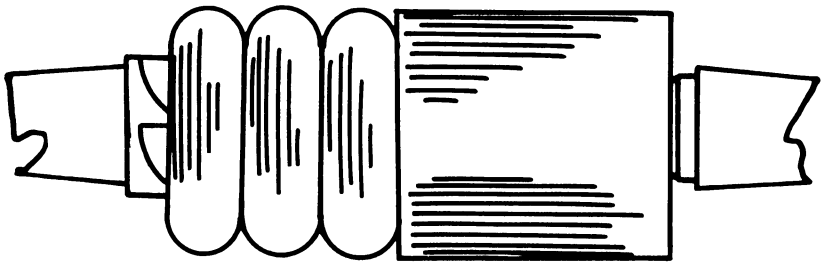

FIG. 283. Convex Cut or "Bead."

The best convex cuts, or "beads," (Fig. 283), are made with the small skew chisel. Four stages in the cutting process are illustrated in Figure 284. The first grooving is made exactly the same as for a V cut and at the points which will be the ends of the bead (Fig. 284A). Then start the cut from the center of the bead as shown in Figure 284B. Hold the blade fairly flat and high enough on the work so that only the heel will cut. Work the tool toward the side (Fig. 284C), and at the same time draw it forward to avoid cutting the adjacent stock. As the groove becomes deeper, keep the back edge of the blade from spoiling the slope of the bead.

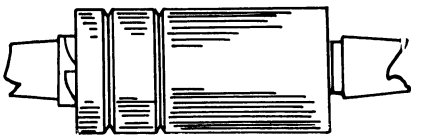

FIG. 284A
First grooves for convex cut.

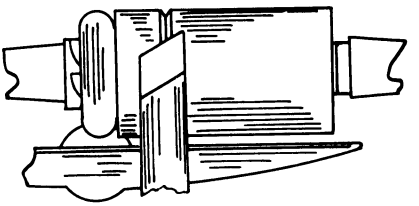

FIG. 284B. Start of Shaping Cut.

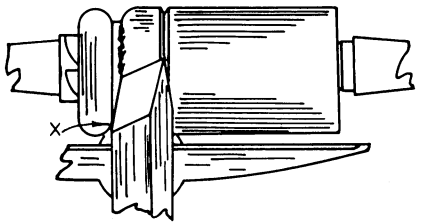

FIG. 284C. Tool will rub at "X" if tool is not drawn forward as work progresses.

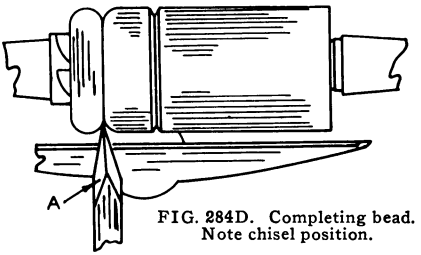

FIG. 284D. Completing bead. Note chisel position.

CONCAVE CUTS

Refer to page 210.

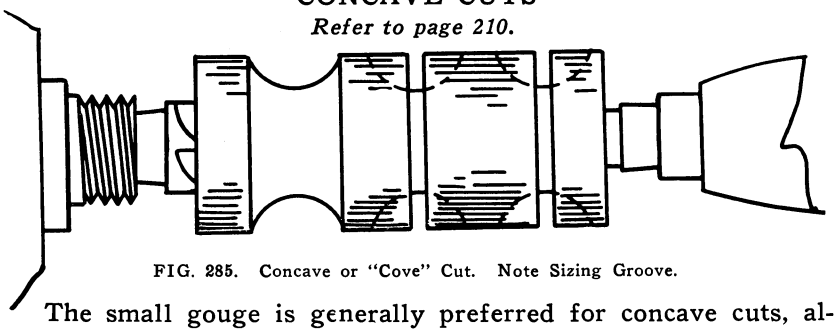

FIG. 285. Concave or "Cove" Cut. Note Sizing Groove.

The small gouge is generally preferred for concave cuts, although a round-nose scraping tool may also be used. Figure 286 shows the proper methods for sharpening the large and small gouge. The sharpened surface should be flat or with a slight outward curve, never hollow-ground, and the cutting edge should be honed very carefully.

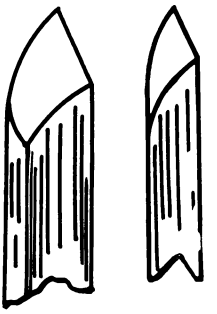

FIG. 286
The small gouge "B" is ground at more of an angle than the large gouge "A."

In making concave cuts with the small gouge, first make sizing grooves with a parting tool as shown in Figure 285. Then cut a groove to approximate shape by pushing the tool directly into the work with a scraping cut (Fig. 288). Then start the tool with the ground portion at a right angle to the side of the groove (Fig. 289) and roll the tool down to the groove center (Fig. 290), cutting with the side lip of the tool. Then reverse the blade and repeat for the other side of the groove. Never attempt to take a cut from the bottom to the top of the groove.

Figure 287 shows how the round-nose scraping tool is used in making a concave curve. This type of chisel is pushed into the work with a scraping cut. The handle is then shifted so that the groove is gradually widened and deepened until finished.

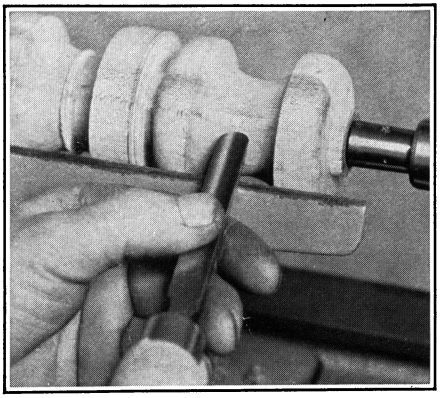

FIG. 287
Taking concave cut with the round nose scraping tool.

CUTTING A CONCAVE CURVE WITH THE SMALL GOUGE

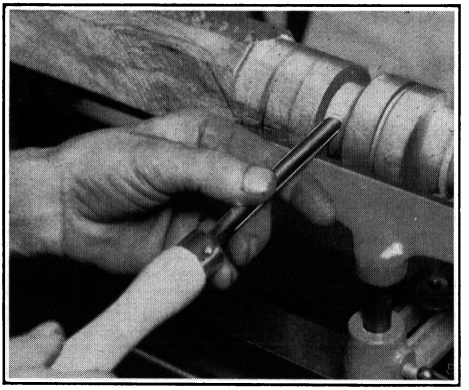

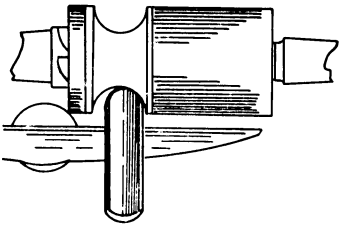

FIG. 288

Roughing out the curve. The tool is pushed directly into the work with a scraping cut.

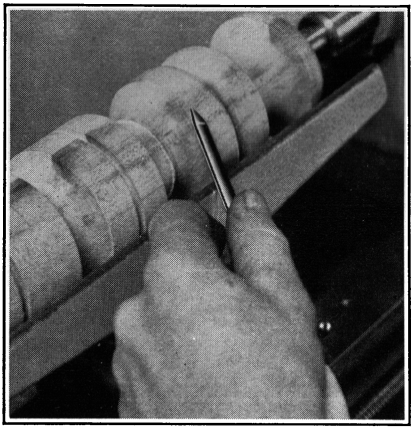

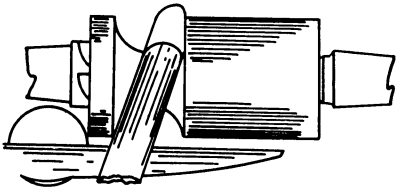

FIG. 289

Proper tool position at start of "rolling" cut. The ground portion of the tool is at a right angle to the side of the groove.

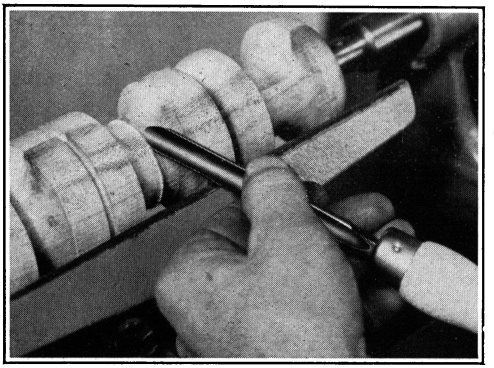

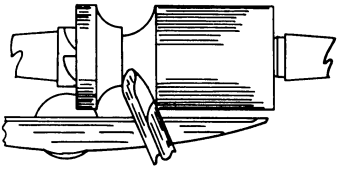

FIG. 290

Tool position at end of "rolling" cut. The cutting has been done with the side lip of the chisel.

CUTTING SQUARE CORNERS

Figure 291 shows how the point of the small skew chisel is held when cutting square corners. The surface of the ground portion is parallel to the shoulder—when the tool is swung farther toward the shoulder, the cutting action is likely to be stopped—when the tool is swung too far away from the shoulder, the chisel point "hogs in."

Cutting up to a shoulder on a cylinder requires considerable practice. Hold the point of the small skew as shown in Figure 292 so that the heel of the tool takes a light cut.

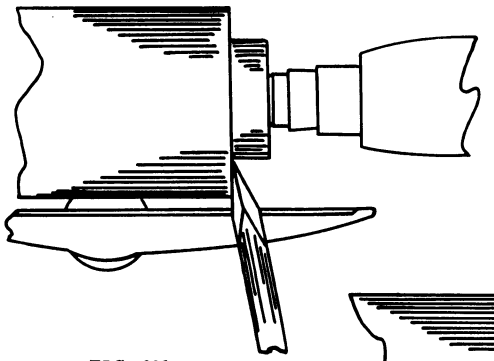

FIG. 291
Using the small skew chisel to cut a square corner. The ground portion at the left is held parallel to the shoulder.

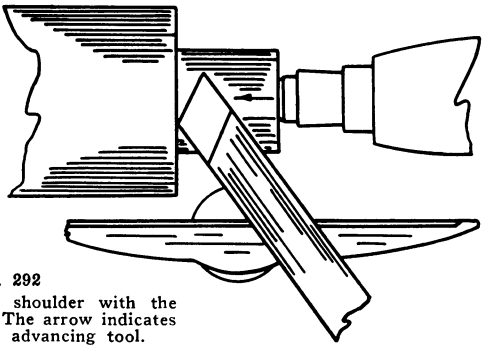

FIG. 292
Cutting up to a shoulder with the small skew chisel. The arrow indicates proper direction for advancing tool.

CUTTING OFF

Although the parting tool can be used for a rough job of cutting off, a smooth, accurate end surface requires both the parting tool and the small skew chisel. In marking the work for cut-off, allow at least 2 inches at the headstock end and enough at the tailstock end to clear the cup center point by ½ inch or more.

Illustrations and detailed instructions for cutting off are given on page 212.

THE STEADY REST

The steady rest is required to support long, slender work, exactly as in metal turning (page 157). The same steady rest can be used for both wood and metal operations. Whenever possible place the steady rest so that the jaws bear on an unfinished portion of the work.

THREE STEPS IN A CLEAN CUT-OFF JOB

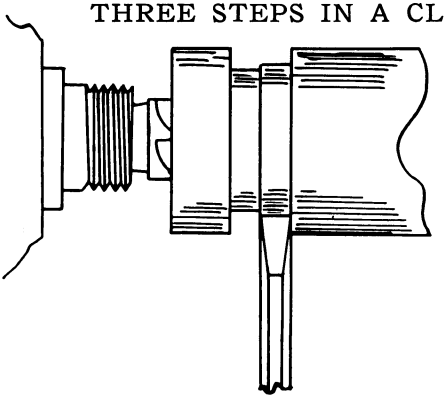

FIG. 293A

Use the parting tool to cut a groove about 3/8 inch wide and deep enough to leave a diameter of about 3/4 inch at each end of the work. As shown at the left, this groove is made by taking two separate cuts with the parting tool.

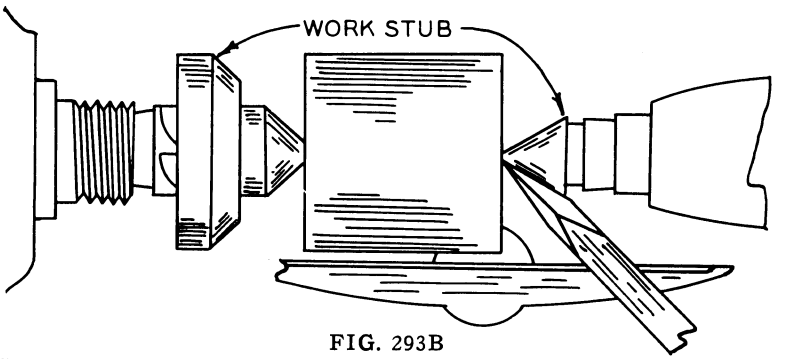

FIG. 293B

Cut a wide V groove at each end with small skew chisel, holding tool the same as for cutting shoulders (page 211). Pare off end to correct dimension, keeping groove well cut out and clear. Continue cut until diameter is about 3/32" at tailstock and 1/8" at headstock—be sure ends are smooth and clean.

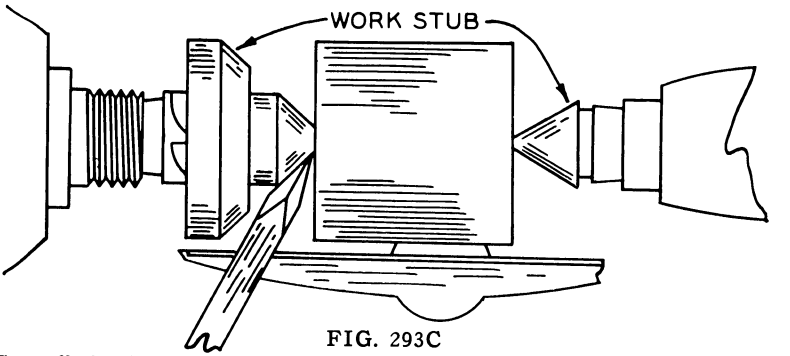

FIG. 293C

Cut off the *headstock* end with the chisel point, catching the work with the left hand as it falls. Cut off the small tailstock end with the skew or a sharp knife. Some operators prefer to stop the lathe when the groove diameters are about 1/4 inch and finish the cut-off with a saw.

FACE PLATE TURNING

Work which cannot be turned between centers is fastened to a face plate or held in a chuck. The screw center (Fig. 260) is considered a special type of face plate for small work. Figure 294 shows a typical face plate operation.

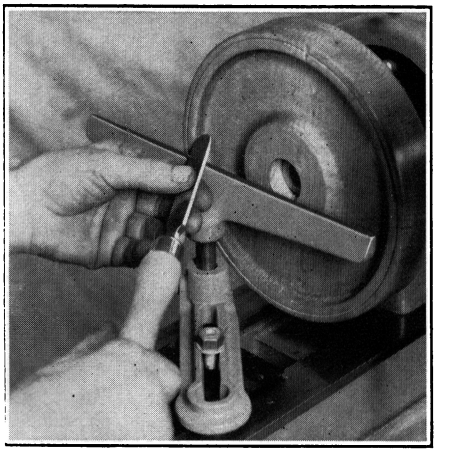

FIG. 294. A Facing Cut.

Two methods of fastening the work to the face plate are shown in Figures 295A and 295B. The short, heavy screws are inserted in the holes of the face plate and can be turned directly into the stock if the screw holes will not be objectionable in the finished work. When screw holes must be avoided, the work is glued to a piece of scrap stock, and the screws tightened into the scrap as shown in Figure 295B. A piece of newspaper placed between the two pieces simplifies removal of the work from the scrap after the operation is completed.

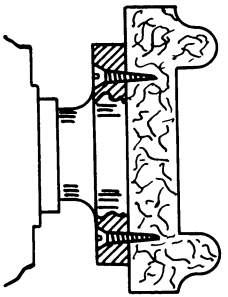

FIG. 295A

When mounting small work on the screw center (Fig. 295C), first drill a lead hole for the screw. Apply soap to the screw when mounting hard woods.

Work can be held in any of the standard metal working chucks or in easily turned

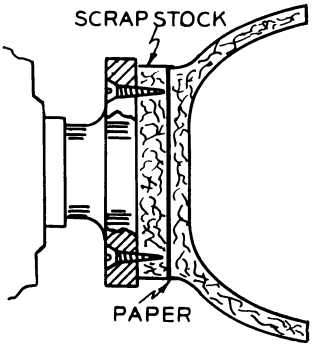

FIG. 295B

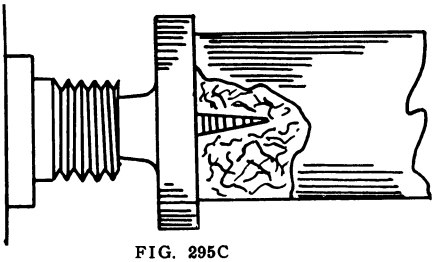

FIG. 295C

Three methods of mounting work for face plate turning. At Fig. 295A the screws are turned directly into the work. In Fig. 295B the stock has been glued to a piece of scrap. Fig. 295C shows work mounted on screw center.

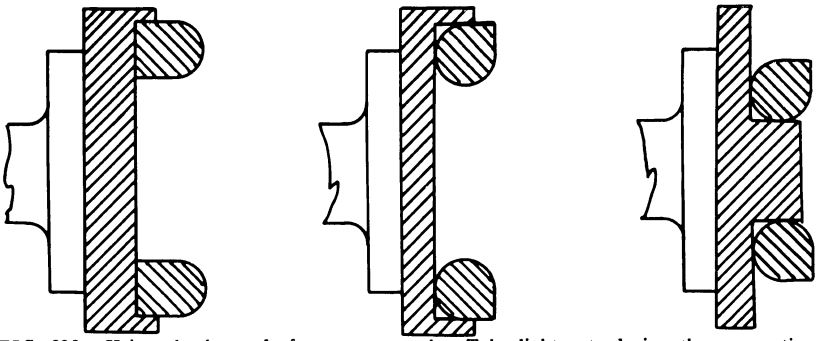

FIG. 296. Using chucks made from scrap stock. Take light cuts during these operations.

chucks made from pieces of wood scrap. Figure 296 shows how a doughnut ring can be turned while held in two simple chucks made especially for the job. The contact between the work and the chuck must be a snug push fit.

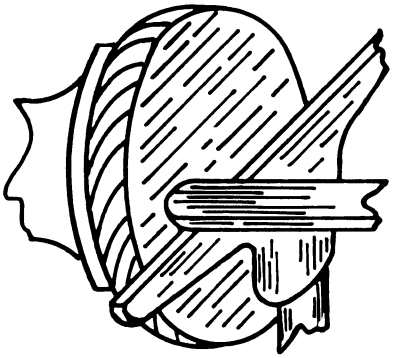

FIG. 297. Tool position for scraping cut when facing.

"SCRAPING" METHOD OF FACE PLATE TURNING

Most face plate work requires a scraping cut with the scraping chisel held horizontally and flat into the work (Figs. 297 and 303). Because face plate turning requires cutting the grain of the wood in all directions, the paring or cutting method used on work between centers is not satisfactory. The large gouge, however, may be used for roughing cuts in the same manner as when turning work between centers (page 202).

Ordinarily paring tools are not used for scraping cuts because

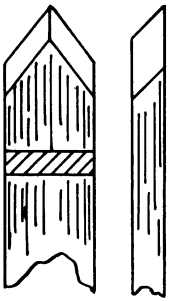

FIG. 298
Spear Point Scraping Chisel.

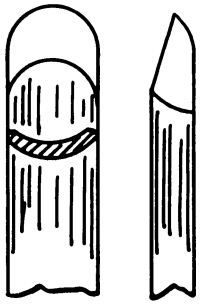

FIG. 299
Round Nose Scraper.

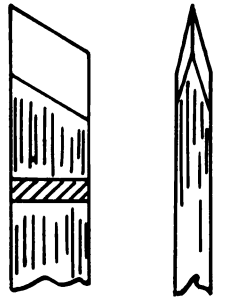

FIG. 300
Small Skew.

the larger clearance or bevel of the paring tool causes the cutting edge to dull quickly. Sometimes the small skew is used for taking convex scraping cuts. The three tool shapes shown in Figures 298 to 300 are recommended for scraping operations. Notice how the clearance angle has been decreased to provide additional strength at the cutting edge.

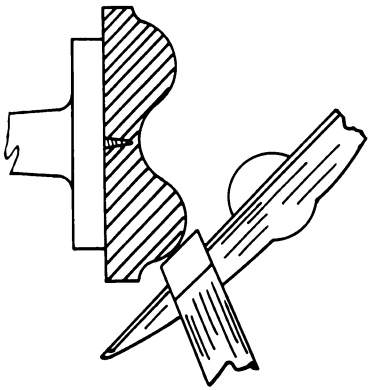

FIG. 301
Taking a convex scraping cut with the small skew chisel.

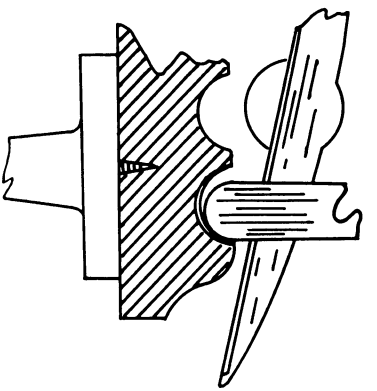

FIG. 302
Taking a concave scraping cut with the round nose scraper.

Before turning down irregular-shaped work on the face plate, saw off the corners or cut them down to approximate shape with a jig saw. Take light cuts to avoid splitting off corners or tearing the work from the face plate. Figures 301, 302, and 303 show the use of scraping tools in three typical facing operations.

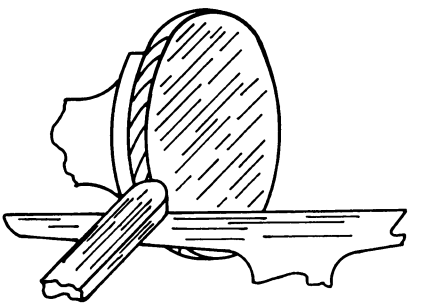

FIG. 303
Using a square end scraper on the outer edge of face plate work.

FINISHING THE WORK

A speed one step faster than that used for general turning is usually fast enough for sanding operations (see Fig. 304). The lathe speed should not be so fast as to burn the wood or paper. Never wrap the sandpaper around the work and grasp it with your fingers. Tear the sandpaper in strips and hold the ends only, or hold an end in one hand and the other end against the bottom of the work with the fingers of the other hand. Hold the paper *lightly* against the work.

Always remove the entire tool rest before sanding a piece of work.

If the work has been turned properly, only a moderate amount of sanding with No. 4/0 paper will be necessary. A short preliminary sanding with No. 1/0 paper is required only for face plate work or when tool marks must be removed.

There are several methods commonly used to give additional finish to the work. To French polish a piece of work, use a pad of cloth to apply a solution of ½ shellac and ½ wood alcohol to the piece while stationary. Then put a few drops of machine oil on the same pad and hold it against the revolving work, moving the pad from side to side. Apply additional shellac solution and oil to the pad as it dries. Continue polishing to desired finish.

Turnings can be waxed by holding a lump of beeswax, paraffin or Carnauba wax against the work as it revolves. The heat will leave a layer of wax on the work, which can be polished to a fine luster with a soft cloth. An attractive finish can be obtained by applying several coats of boiled linseed oil and polishing each coat thoroughly while the work revolves.

When the work is to be stained or filled and later finished with either a French polish or wax, it is best to leave the ends uncut so that the work can be remounted in the lathe for polishing.

WOODTURNING SPEEDS

Figure 304 gives recommended speeds for roughing, general finish cutting, and fine finish cuts and sanding for various work diameters. *The largest diameter of the work determines the lathe spindle speed.*

These speeds are obtained with a 1740 R.P.M. motor (Fig. 55, page 47). They are approximate only. The two speeds higher than 2,072 R.P.M. are not absolutely necessary—the 2,072 R.P.M. speed is satisfactory for the general cutting and finishing of small work less than 2 inches in diameter.

FIGURE 304

WOOD TURNING SPEEDS IN R.P.M.

Diameter	Roughing Cuts	General Finish Cuts	Fine Finish Cuts and Sanding
Up to 2″	2,072	2,700*	4,000*
2″ to 3″	1,270	1,270	2,072
3″ to 4″	805	1,270	2,072
4″ to 5″	685	1,270	1,270
5″ to 6″	685	805	1,270
6″ to 7″	500	805	1,270
7″ to 8″	500	685	805
8″ to 9″	418	500	805
9″ to 10″	418	500	685

* Use jackshaft No. L2-675.

SAFETY FIRST!

Never wear a necktie when working on the lathe. Keep your sleeves rolled up or wear a work shirt with no sleeves. Industrial safety codes demand these precautions.

Select solid wood, free from slivers. Always lock tailstock before beginning operation—don't take deep cuts at the start.

PROPERTIES OF THE COMMON WOODS

WHITE PINE has been one of the most useful of all trees in the United States. The wood is one of the easiest and most satisfactory to work, due to the uniformity of its grain. White pine is unequalled for all purposes requiring a wood that checks and shrinks very little and holds its shape well. It is very light and soft, and of medium strength, elasticity and durability. It splits easily but nails well. In color it is light brown, almost a cream color. The grain is not noticeable and has no particular beauty.

MAPLE is hard, strong and ideal for general turning operations. It is close-grained and, when finished properly, makes a fine wood for furniture and decorative work.

CYPRESS is a soft, easily worked wood which does not warp badly, but is likely to contain many fine checks. It nails well and is very durable. It has a reddish brown color and no resin ducts. Its beauty makes it a desirable wood for interior finish and some types of furniture.

WHITE OAK is commonly used for furniture and interior finish. It is very strong, quite heavy, elastic, and hard. It is rather hard to work and nail, and checks and warps considerably unless carefully seasoned. However oak is extremely attractive when carefully worked. The color is a light brown. The rings are plainly defined by pores which, when stained, make a pleasing contrast with the "summer" wood, or pith rays.

WHITE ASH is a heavy, strong, elastic hardwood, often used for such articles as tool handles, oars, barrels, etc. It splits badly in nailing. It is commonly used for furniture and inside finish because of its strength and beauty when slash sawn.

YELLOW POPLAR is a general utility wood which has largely taken the place of white pine. It is light, brittle, soft, easy to

work, nails very well, has medium strength, and does not warp badly when handled properly. The pith rays are quite noticeable, but not commonly used for decorative purposes. The color is greenish, or yellow brown. Yellow poplar is a good wood to keep in stock for all sorts of purposes, and an ideal wood for carving.

GUM has a beautiful chocolate color, varied with uneven deposits of coloring matter. It has an even texture, takes a fine finish, polishes well; it is comparatively easy to work, a good wood for carving, and nails fairly easily. However, gum twists and warps more than any other common wood. It is often used in making small articles for household use.

BLACK WALNUT is a rather expensive coarse-grained wood, very easily worked. It is chocolate in color and used very commonly for fine furniture.

MAHOGANY is a general name covering a number of species, all of which are imported. The different varieties are somewhat alike in color, a reddish brown. The annual rings vary considerably in hardness, difficulty of nailing and shade of color. The grain is likely to be variable, causing an attractive reflection of light. Few woods take glue better than a mahogany.

Part 10

MACHINISTS TABLES

PART 10

MACHINISTS TABLES

Page	Table
219	CIRCUMFERENCES AND AREAS OF CIRCLES
220-221	DECIMAL EQUIVALENTS
222-223	WEIGHTS AND MEASURES
223	METRIC SYSTEMS
224	CIRCLES, CALCULATIONS
224	AREAS OR SURFACES CALCULATIONS
224	VOLUMES, CALCULATIONS
225	DIAMETERS OF NUMBERED DRILLS
225	DIAMETERS OF LETTERED DRILLS
225	ALLOWANCES FOR MACHINE FITS
226	WIRE AND SHEET METAL GAUGES
227-228	DESCRIPTION AND DATA ON STEELS
229	TEMPERATURES OF STEEL JUDGED BY COLOR
230	SPINDLE SPEEDS—UNIT PLAN & 9″ LATHES

CIRCUMFERENCES AND AREAS OF CIRCLES

Dia.	Circ.	Area	Dia.	Circ.	Area	Dia.	Circ.	Area
1	3.1416	.7854	35	109.96	962.11	68	213.63	3631.68
2	6.2832	3.1416	36	113.10	1017.88	69	216.77	3739.28
3	9.4248	7.0686	37	116.24	1075.21	70	219.91	3848.45
4	12.5664	12.5664	38	119.38	1134.11	71	223.05	3959.19
5	15.7080	19.635	39	122.52	1194.59	72	226.19	4071.50
6	18.850	28.274	40	125.66	1256.64	73	229.34	4185.39
7	21.991	38.485	41	128.81	1320.25	74	232.48	4300.84
8	25.133	50.266	42	131.95	1385.44	75	235.62	4417.86
9	28.274	63.617	43	135.09	1452.20	76	238.76	4536.46
10	31.416	78.540	44	138.23	1520.53	77	241.90	4656.63
11	34.558	95.033	45	141.37	1590.43	78	245.04	4778.36
12	37.699	113.1	46	144.51	1661.90	79	248.19	4901.67
13	40.841	132.73	47	147.65	1734.94	80	251.33	5026.55
14	43.982	153.94	48	150.80	1809.56	81	254.47	5153.00
15	47.124	176.71	49	153.94	1885.74	82	257.61	5281.02
16	50.265	201.06	50	157.08	1963.50	83	260.75	5410.61
17	53.407	226.98	51	160.22	2042.82	84	263.89	5541.77
18	56.549	254.47	52	163.36	2123.72	85	267.04	5674.50
19	59.690	283.53	53	166.50	2206.18	86	270.18	5808.80
20	62.832	314.16	54	169.65	2290.22	87	273.32	5944.68
21	65.973	346.36	55	172.79	2375.83	88	276.46	6082.12
22	69.115	380.13	56	175.93	2463.01	89	279.60	6221.14
22	72.257	415.48	57	179.07	2551.76	90	282.74	6361.73
24	75.398	452.39	58	182.21	2642.08	91	285.88	6503.88
25	78.540	490.87	59	185.35	2733.97	92	289.03	6647.61
26	81.681	530.93	60	188.50	2827.43	93	292.17	6792.91
27	84.823	572.56	61	191.64	2922.47	94	295.31	6939.78
28	87.965	615.75	62	194.78	3019.07	95	298.45	7088.22
29	91.106	660.52	63	197.92	3117.25	96	301.59	7238.23
30	94.248	706.86	64	201.06	3216.99	97	304.73	7339.81
31	97.389	754.77	65	204.20	3318.31	98	307.88	7542.96
32	100.53	804.25	66	207.34	3421.19	99	311.02	7697.69
33	103.67	855.30	67	210.49	3525.65	100	314.16	7853.98
34	106.81	907.92						

TABLE OF DECIMAL EQUIVALENTS

Millimeters and Fractions of an Inch

Fraction of an Inch "N"	Millimeters	Decimal Equivalent Inches	Circle with Diameter "N" Circum.	Area
	.1	.0039		
	.2	.0079		
	.3	.0118		
1/64		.0156	.04909	.00019
	.4	.0157		
	.5	.0197		
	.6	.0236		
	.7	.0276		
1/32		.0312	.09818	.00077
	.8	.0315		
	.9	.0354		
	1.0	.0394		
	1.1	.0433		
3/64		.0469	.14726	.00173
	1.2	.0472		
	1.25	.0492		
	1.3	.0512		
	1.4	.0551		
	1.5	.0590		
1/16		.0625	.19635	.00307
	1.6	.0630		
	1.7	.0669		
	1.75	.0689		
	1.8	.0709		
	1.9	.0748		
5/64		.0781	.24544	.00479
	2.0	.0787		
	2.1	.0827		
	2.2	.0866		
	2.25	.0886		
	2.3	.0905		
3/32		.0937	.29452	.00690
	2.4	.0945		
	2.5	.0984		
	2.6	.1024		
	2.7	.1063		
	2.75	.1083		
7/64		.1094	.34361	.00939
	2.8	.1102		
	2.9	.1142		
	3.0	.1181		
	3.1	.1220		
1/8		*.1250*	*.39270*	*.01227*
	3.2	.1260		
	3.25	.1280		
	3.3	.1299		
	3.4	.1339		
	3.5	.1378		
9/64		.1406	.44179	.01554
	3.6	.1417		
	3.7	.1457		
	3.75	.1476		
	3.8	.1496		
	3.9	.1535		
5/32		.1562	.49087	.01917
	4.0	.1575		
	4.1	.1614		
	4.2	.1654		
	4.25	.1673		
	4.3	.1693		
11/64		.1719	.53996	.02320
	4.4	.1732		
	4.5	.1772		
	4.6	.1811		
	4.7	.1850		
	4.75	.1870		
3/16		.1875	.58905	.02761
	4.8	.1890		
	4.9	.1929		
	5.0	.1968		
	5.1	.2008		
13/64		.2031	.63814	.03241
	5.2	.2047		
	5.25	.2067		
	5.3	.2087		
	5.4	.2126		
	5.5	.2165		
7/32		.2187	.68722	.03258
	5.6	.2205		
	5.7	.2244		
	5.75	.2264		
	5.8	.2283		
	5.9	.2323		
15/64		.2344	.73631	.04314
	6.0	.2362		
	6.1	.2402		
	6.2	.2441		
	6.25	.2461		
	6.3	.2480		
1/4		*.2500*	*.78540*	*.04909*
	6.4	.2520		
	6.5	.2559		
	6.6	.2598		
	6.7	.2638		
17/64		.2656	.83448	.05542
	6.75	.2657		
	6.8	.2677		
	6.9	.2717		
	7.0	.2756		
	7.1	.2795		
9/32		.2812	.88357	.06213
	7.2	.2835		
	7.25	.2854		
	7.3	.2874		
	7.4	.2913		
	7.5	.2953		
19/64		.2969	.93266	.06922
	7.6	.2992		

Fraction of an Inch "N"	Milli-meters	Decimal Equiv-alent Inches	Circle with Diameter "N" Circum.	Area
	7.7	.3031		
	7.75	.3051		
	7.8	.3071		
	7.9	.3110		
5/16		.3125	.98175	.07670
	8.0	.3150		
	8.1	.3189		
	8.2	.3228		
	8.25	.3248		
	8.3	.3268		
21/64		.3281	1.0308	.08456
	8.4	.3307		
	8.5	.3346		
	8.6	.3386		
	8.7	.3425		
11/32		.3437	1.0799	.09281
	8.75	.3445		
	8.8	.3465		
	8.9	.3504		
	9.0	.3543		
	9.1	.3583		
23/64		.3594	1.1290	.10143
	9.2	.3622		
	9.25	.3642		
	9.3	.3661		
	9.4	.3701		
	9.5	.3740		
3/8		*.3750*	*1.1781*	*.11045*
	9.6	.3780		
	9.7	.3819		
	9.75	.3839		
	9.8	.3858		
	9.9	.3898		
25/64		.3906	1.2272	.11984
	10.0	.3937		
	10.25	.4035		
13/32		.4062	1.2763	.12962
	10.5	.4134		
27/64		.4219	1.3254	.13979
	10.75	.4232		
	11.0	.4331		
7/16		.4375	1.3744	.15033
	11.25	.4429		
	11.5	.4528		
29/64		.4531	1.4235	.16126
	11.75	.4626		
15/32		.4687	1.4726	.17257
	12.0	.4724		
	12.25	.4823		
31/64		.4844	1.5217	.18427
	12.5	.4921		
1/2		*.5000*	*1.5708*	*.19635*
	12.75	.5020		
	13.0	.5118		
33/64		.5156	1.6199	.20881
17/32		.5312	1.6690	.22166
	13.5	.5315		
35/64		.5469	1.7181	.23489
	14.0	.5512		
9/16		.5625	1.7671	.24850
	14.5	.5709		
37/64		.5781	1.8162	.26250
	15.0	.5906		
19/32		.5937	1.8653	.27688
39/64		.6094	1.9144	.29165
	15.5	.6102		
5/8		*.6250*	*1.9635*	*.30680*
	16.0	.6299		
41/64		.6406	2.0126	.32233
	16.5	.6496		
21/32		.6562	2.0617	.33824
	17.0	.6693		
43/64		.6719	2.1108	.35454
11/16		.6875	2.1598	.37122
	17.5	.6890		
45/64		.7031	2.2089	.38829
	18.0	.7087		
23/32		.7187	2.2580	.40574
	18.5	.7283		
47/64		.7344	2.3071	.42357
	19.0	.7480		
3/4		*.7500*	*2.3562*	*.44179*
49/64		.7656	2.4053	.46038
	19.5	.7677		
25/32		.7812	2.4544	.47937
	20.0	.7874		
51/64		.7969	2.5035	.49874
	20.5	.8071		
13/16		.8125	2.5525	.51849
	21.0	.8268		
53/64		.8281	2.6016	.53862
27/32		.8437	2.6507	.55914
	21.5	.8465		
55/64		.8594	2.6998	.58004
	22.0	.8661		
7/8		*.8750*	*2.7489*	*.60132*
	22.5	.8858		
57/64		.8906	2.7980	.62299
	23.0	.9055		
29/32		.9062	2.8471	.64504
59/64		.9219	2.8962	.66747
	23.5	.9252		
15/16		.9375	2.9452	.69029
	24.0	.9449		
61/64		.9531	2.9943	.71349
	24.5	.9646		
31/32		.9687	3.0434	.73708
	25.0	.9842		
63/64		.9844	3.0925	.76104
1 Inch	*25.4*	*1.0000*	*3.1416*	*.7854*

WEIGHTS AND MEASURES

LINEAR MEASURE

12	inches (in.)	= 1	foot	ft.
3	feet	= 1	yard	yd.
5.5	yards	= 1	rod	rd.
40	rods	= 1	furlong	fur.
8	furlongs	= 1	mile	mi.

in.	ft.	yd.	rd.	fur.	mi.
36 =	3 =	1			
198 =	16.5 =	5.5 =	1		
7,920 =	660 =	220 =	40 =	1	
63,360 =	5,280 =	1,760 =	320 =	8 =	1

SQUARE MEASURE

144	square inches (sq. in.)	= 1	square foot	sq. ft.
9	square feet	= 1	square yard	sq. yd.
30¼	square yards	= 1	square rod	sq. rd.
160	square rods	= 1	acre	A.
640	acres	= 1	square mile	sq. mi.

sq. mi.	A.	sq. rd.	sq. yd.	sq. ft.	sq. in.
1 =	640 =	102,400 =	3,097,600 =	27,878,400 =	4,014,489,600

CUBIC MEASURE

1,728	cubic inches (cu. in.)	= 1	cubic foot	cu. ft.
27	cubic feet	= 1	cubic yard	cu. yd.
128	cubic feet	= 1	cord	cd.
24¾	cubic feet	= 1	perch	P.

1 cu. yd. = 27 cu. ft. = 46,656 cu. in.

MEASURE OF ANGLES OR ARCS

60	seconds (″)	= 1	minute	′
60	minutes	= 1	degree	°
90	degrees	= 1	rt. angle or quadrant	□
360	degrees	= 1	circle	cir.

1 cir. = 360° = 21,600′ = 1,296,000″

AVOIRDUPOIS WEIGHT

437.5	grains (gr.)	= 1	ounce	oz.
16	ounces	= 1	pound	lb.
100	pounds	= 1	hundredweight	cwt.
20	cwt., or 2,000 lb.	= 1	ton	T.

1 T. = 20 cwt. = 2,000 lb. = 32,000 oz. = 14,000,000 gr.

The avoirdupois pound contains 7,000 grains.

DRY MEASURE

2	pints (pt.)	= 1	quart	qt.
8	quarts	= 1	peck	pk.
4	pecks	= 1	bushel	bu.

1 bu. = 4 pk. = 32 qt. = 64 pt.

The U. S. struck bushel contains 2,150.42 cu. in. = 1.2444 cu. ft. By law, its dimensions are those of a cylinder 18½ in. in diameter and 8 in. deep. The heaped bushel is equal to 1¼ struck bushels, the cone being 6 in. high. The dry gallon contains 268.8 cu. in., being ⅛ of a struck bushel.

For approximations, the bushel may be taken at 1¼ cu. ft.; or a cubic foot may be considered 4/5 of a bushel.

The British bushel contains 2,218.19 cu. in. = 1.2837 cu. ft. = 1.032 U. S. bushels.

LIQUID MEASURE

4	gills (gi.)	= 1	pint	pt.
2	pints	= 1	quart	qt.
4	quarts	= 1	gallon	gal.
31½	gallons	= 1	barrel	bbl.
2	barrels, or 63 gallons	= 1	hogshead	hhd.

1 hhd. = 2 bbl. = 63 gal. = 252 qt. = 504 pt. = 2,016 gi.

The U. S. gallon contains 231 cu. in. = .134 cu. ft., nearly; or 1 cu. ft. contains 7.481 gal. The following cylinders contain the given measures very closely:

	Diam.	Height		Diam.	Height
Gill	1¾ in.	3 in.	Gallon	7 in.	6 in.
Pint	3½ in.	3 in.	8 Gallons	14 in.	12 in.
Quart	3½ in.	6 in.	10 Gallons	14 in.	15 in.

When water is at its maximum density, 1 cu. ft. weighs 62.425 lb. and 1 gallon weighs 8.345 lb.

For approximations, 1 cu. ft. of water is considered equal to 7½ gal., and 1 gal. as weighing 8½ lb.

The British imperial gallon, both liquid and dry, contains 277.274 cu. in. = .16046 cu. ft., and is equivalent to the volume of 10 lb. of pure water at 62° F. To reduce British to U. S. liquid gallons, multiply by 1.2. Conversely, to convert U. S. into British liquid gallons, divide by 1.2; or, increase the number of gallons 1/5.

THE METRIC SYSTEM

MEASURES OF LENGTH

10 millimeters	(mm.)	= 1	centimeter	cm.
10 centimeters		= 1	decimeter	dm.
10 decimeters		= 1	meter	m.
10 meters		= 1	decameter	Dm.
10 decameters		= 1	hectometer	Hm.
10 hectometers		= 1	kilometer	Km.

MEASURES OF SURFACE (NOT LAND)

100 square millimeters	(mm^2.)	= 1	square centimeter	cm^2.
100 square centimeters		= 1	square decimeter	dm^2.
100 square decimeters		= 1	square meter	m^2.

MEASURES OF VOLUME

1,000 cubic millimeters	(mm^3.)	= 1	cubic centimeter	cm^3.
1,000 cubic centimeters		= 1	cubic decimeter	dm^3.
1,000 cubic decimeters		= 1	cubic meter	m^3.

MEASURES OF CAPACITY

10 milliliters	(ml.)	= 1	centiliter	cl.
10 centiliters		= 1	deciliter	dl.
10 deciliters		= 1	liter	l.
10 liters		= 1	decaliter	Dl.
10 decaliters		= 1	hectoliters	Hl.
10 hectoliters		= 1	kiloliters	Kl.

NOTE.—The liter is equal to the volume occupied by 1 cubic decimeter.

MEASURES OF WEIGHT

10 milligrams	(mg.)	= 1	centigram	cg.
10 centigrams		= 1	decigram	dg.
10 decigrams		= 1	gram	g.
10 grams		= 1	decagram	Dg.
10 decagrams		= 1	hectogram	Hg.
10 hectograms		= 1	kilogram	Kg.
1,000 kilograms		= 1	ton	T.

NOTE.—The gram is the weight of 1 cubic centimeter of pure distilled water at a temperature of 39.2° F.; the kilogram is the weight of 1 liter of water; the ton is the weight of 1 cubic meter of water.

PROPERTIES OF CIRCLES

Circumference of circle = diameter × 3.1416.
Diameter of circle = circumference × 0.3183.
Side of square inscribed in circle = diameter of circle × 0.7071.
Diameter of circle circumscribed about square = side of square × 1.4142.
Length of arc = number of degrees × diameter × 0.008727.
Circumference of circle whose diameter is 1 = 3.14159265.

AREA OR SURFACE

Triangle = base × half perpendicular height.
Parallelogram = base × perpendicular height.
Trapezoid = half the sum of the parallel sides × perpendicular height.
Trapezium, found by dividing into two triangles.
Circle = diameter squared × 0.7854; or radius squared × 3.1416.
Sector of circle = length of arc × half radius. (See above for length of arc.)
Segment of circle less than semi-circle = area of sector minus area of triangle.
Segment of circle greater than semi-circle = area of sector + area of triangle.
Side of square of equal area as circle = diameter of circle × 0.8862.
Diameter of circle of equal area as square = side of square × 1.1284.
Parabola = base × ⅔ perpendicular height.
Ellipse = long diameter × short diameter × 0.7854.
Regular polygon = sum of sides × half perpendicular distance from center to sides.
Cylinder = (circumference × height) + area of both ends.
Sphere = diameter squared × 3.1416.
Segment of sphere = (height of segment × circumference of sphere of which it is a part) + area of base.
Right pyramid or cone = periphery or circumference of base × half slant height + area of base.
Frustum of a regular right pyramid or cone = (sum of peripheries or circumferences of the two ends × half slant height) + area of both ends.

SOLID CONTENTS OR VOLUME

Prism, right or oblique, = area of base × perpendicular height.

Cylinder, right or oblique, = area of section at right angles to sides × length of side.

Sphere = diameter cubed × 0.5236.

Segment of sphere = (height of segment squared + three times the square of radius of base of segment) × height of segment × 0.5236.

Side of cube having equal volume as sphere = diameter of sphere × 0.806.

Length of cylinder having equal volume and same diameter as sphere = diameter of sphere × 0.6667.

Pyramid or cone, right or oblique, regular or irregular, = area of base × ⅓ perpendicular height.

Frustum of cone = multiply area of two ends together and extract the square root; add to this square root the sum of the areas of both ends and then multiply the total sum by ⅓ the perpendicular distance between the ends.

The Prismoidal Formula can be used for obtaining the volume of any solid with irregular or regular shaped parallel ends and with straight sides (prismatoids). First add together the areas of the two parallel ends. To this add four times the area of a section parallel to the ends and midway between them. Now multiply the total sum by ⅙ the perpendicular distance between the parallel ends and you have the volume.

DIAMETERS OF NUMBERED DRILLS

Drill No.	Diameter Inches	Drill No.	Diameter Inches	Drill No.	Diameter Inches
80	.0135	53	.0595	26	.1470
79	.0145	52	.0635	25	.1495
78	.0160	51	.0670	24	.1520
77	.0180	50	.0700	23	.1540
76	.0200	49	.0730	22	.1570
75	.0210	48	.0760	21	.1590
74	.0225	47	.0785	20	.1610
73	.0240	46	.0810	19	.1660
72	.0250	45	.0820	18	.1695
71	.0260	44	.0860	17	.1730
70	.0280	43	.0890	16	.1770
69	.0292	42	.0935	15	.1800
68	.0310	41	.0960	14	.1820
67	.0320	40	.0980	13	.1850
66	.0330	39	.0995	12	.1890
65	.0350	38	.1015	11	.1910
64	.0360	37	.1040	10	.1935
63	.0370	36	.1065	9	.1960
62	.0380	35	.1100	8	.1990
61	.0390	34	.1110	7	.2010
60	.0400	33	.1130	6	.2040
59	.0410	32	.1160	5	.2055
58	.0420	31	.1200	4	.2090
57	.0430	30	.1285	3	.2130
56	.0465	29	.1360	2	.2210
55	.0520	28	.1405	1	.2280
54	.0550	27	.1440		

DIAMETERS OF LETTERED DRILLS

Drill No.	Diameter Inches
A	.2340
B	.2380
C	.2420
D	.2460
E	.2500
F	.2570
G	.2610
H	.2660
I	.2720
J	.2770
K	.2810
L	.2900
M	.2950
N	.3020
O	.3160
P	.3230
Q	.3320
R	.3390
S	.3480
T	.3580
U	.3680
V	.3770
W	.3860
X	.3970
Y	.4040
Z	.4130

ALLOWANCES FOR MACHINE FITS

In all work requiring running, push, drive or forced fits, the diameter of the hole should be exact as specified within the limits given, while the diameter of the shaft shall be such that it will fit the hole according to the given allowances for various fits.

Nominal diameter Inches	Hole Tolerance	Allowances for Different Fits			
		Running Fit	Push Fit	Drive Fit	Forced Fit
Up to ½"	+.0005 −.0005	−.001 −.002	−.0003 −.0008	+.0005 +.0003	+.001 +.0005
½" to 1"	+.001 −.0005	−.0015 −.003	−.0003 −.0008	+.001 +.0008	+.002 +.0015
1" to 2"	+.001 −.0005	−.002 −.004	−.0003 −.0008	+.0015 +.001	+.004 +.003
2" to 3"	+.0015 −.001	−.0025 −.0045	−.0005 −.001	+.0025 +.0015	+.006 +.0045
3" to 4"	+.0015 −.001	−.003 −.005	−.0005 −.001	+.003 +.002	+.008 +.006

WIRE AND SHEET METAL GAUGES IN APPROXIMATE DECIMALS OF AN INCH

No. of Wire Gauge	American or Brown & Sharpe	Birmingham or Stub's Iron Wire	Washburn & Moen, Am. Steel & Wire Co., and Roebling	Stub's Steel Wire	Trenton Iron Co.	British Imperial Wire	U. S. Standard for Plate
0000000	....	...	.4900	...	....	.5000	.5000
000000	.5800	...	.4615	...	....	.4640	.4688
00000	.5165	.500	.4305	...	.4500	.4320	.4375
0000	.4600	.454	.3938	...	.4000	.4000	.4063
000	.4096	.425	.3625	...	.3600	.3720	.3750
00	.3648	.380	.3310	...	.3300	.3480	.3438
0	.3249	.340	.3065	...	.3050	.3240	.3125
1	.2893	.300	.2830	.227	.2850	.3000	.2813
2	.2576	.284	.2625	.219	.2650	.2760	.2656
3	.2294	.259	.2437	.212	.2450	.2520	.2500
4	.2043	.238	.2253	.207	.2250	.2320	.2344
5	.1819	.220	.2070	.204	.2050	.2120	.2188
6	.1620	.203	.1920	.201	.1900	.1920	.2031
7	.1443	.180	.1770	.199	.1750	.1760	.1875
8	.1285	.165	.1620	.197	.1600	.1600	.1719
9	.1144	.148	.1483	.194	.1450	.1440	.1563
10	.1019	.134	.1350	.191	.1300	.1280	.1406
11	.0907	.120	.1205	.188	.1175	.1160	.1250
12	.0808	.109	.1055	.185	.1050	.1040	.1094
13	.0720	.095	.0915	.182	.0925	.0920	.0938
14	.0641	.083	.0800	.180	.0800	.0800	.0781
15	.0571	.072	.0720	.178	.0700	.0720	.0703
16	.0508	.065	.0625	.175	.0610	.0640	.0625
17	.0453	.058	.0540	.172	.0525	.0560	.0563
18	.0403	.049	.0475	.168	.0450	.0480	.0500
19	.0359	.042	.0410	.164	.0400	.0400	.0438
20	.0320	.035	.0348	.161	.0350	.0360	.0375
21	.0285	.032	.0317	.157	.0310	.0320	.0344
22	.0253	.028	.0286	.155	.0280	.0280	.0313
23	.0226	.025	.0258	.153	.0250	.0240	.0281
24	.0201	.022	.0230	.151	.0225	.0220	.0250
25	.0179	.020	.0204	.148	.0200	.0200	.0219
26	.0159	.018	.0181	.146	.0180	.0180	.0188
27	.0142	.016	.0173	.143	.0170	.0164	.0172
28	.0126	.014	.0162	.139	.0160	.0148	.0156
29	.0113	.013	.0150	.134	.0150	.0136	.0141
30	.0100	.012	.0140	.127	.0140	.0124	.0125
31	.0089	.010	.0132	.120	.0130	.0116	.0109
32	.0080	.009	.0128	.115	.0120	.0108	.0102
33	.0071	.008	.0118	.112	.0110	.0100	.0094
34	.0063	.007	.0104	.110	.0100	.0092	.0086
35	.0056	.005	.0095	.108	.0095	.0084	.0078
36	.0050	.004	.0090	.106	.0090	.0076	.0070
37	.0045	...	.0085	.103	.0085	.0068	.0066
38	.0040	...	.0080	.101	.0080	.0060	.0063
39	.0035	...	.0075	.099	.0075	.0052	....
40	.0031	...	.0070	.097	.0070	.0048	....

DESCRIPTION AND DATA ON STEELS

Commonly Warehoused in the United States

—— S.A.E. 1112 ——

PHYSICAL PROPERTIES

As Cold Drawn:—Tensile Strength 80,000 lbs/in². Brinnel Hardness 185. Elongation in two inches 16%.
As Hot Rolled:—Tensile Strength 67,000 lbs/in². Brinnell Hardness 140. Elongation in two inches 27%.

A free cutting, Bessemer Screw Stock, easy to machine. Used in automatic screw machine work for parts not requiring great strength or ductility. Not used for parts requiring bending, expanding, rivetting or deforming operations. It is not suitable for simple heat treatment, but can be carburized and case hardened, although a rather weak core results. S.A.E. 1112 is somewhat brittle, which is emphasized by case hardening. For simple carburizing to produce maximum surface hardness, carburize at 1600° F. and quench in water or oil.

—— S.A.E. X1112 ——

PHYSICAL PROPERTIES

As Cold Drawn:—Tensile Strength 100,000 lbs/in². Brinnel Hardness 193. Elongation in two inches 15%.

An exceptionally free cutting, Bessemer Screw Stock, very easy to machine. Used for automatic screw machine work and screw machine work for close-tolerance parts requiring a smooth finish. Will withstand deforming better than 1112 and is a little stronger. Recommended in place of 1112 for most types of work. It does not respond well to simple heat treatment, but can be carburized or cyanided and will have a little better core strength than 1112. Carburizing treatment is the same as given for 1112.

—— S.A.E. X1314 AND X1315 ——

PHYSICAL PROPERTIES

As Cold Drawn:—Tensile Strength 82,000 lbs/in². Brinnel Hardness 162. Elongation in two inches 18%
As Hot Rolled:—Tensile Strength 71,000 lbs/in². Brinnel Hardness 135. Elongation in two inches 28%.

Open hearth steel, high manganese screw stocks, easy to machine, with good ductility and mechanical strength. There is little difference between X1314 and X1315 although is is claimed that X1314 is better for thin wall case hardened parts such as piston pins, etc. Used for shafting, steering gear cams, etc. Both can be simple heat treated, although X1315 is recommended for that purpose. Both can be case hardened successfully. These steels can be substituted for 1015 and 1020 except for parts requiring heavy deformation, and will be found to give faster machining, brighter and smoother finish and longer tool life. They are used both cold drawn and hot rolled. For simple heat treatment, heat to 1650° F., quench in water, and draw to required hardness between 400° and 1200° F., however, for such treatment it is recommended that X1335 be considered. For simple carburizing, carburize at 1650° F. and quench in oil or water.

—— S.A.E. X1335 ——

PHYSICAL PROPERTIES

As Cold Drawn:—Tensile Strength 105,000 lbs/in². Brinnel Hardness 212. Elongation in two inches 15%.
As Hot Rolled:—Tensile Strength 95,000 lbs/in². Brinnel Hardness 185. Elongation in two inches 18%.

An excellent steel for machining and automatic or hand screw machine work and often used as a substitute for 1025, 1030, 1035, 1040 and 1045, due to its strength and heat treating properties. It is a high manganese screw stock, open hearth steel, used for gears, worms, bolts, shafting,

moving mechanisms, etc. Machines with a better finish than carbon steel and produces much better threads. Ideal for simple heat treatment, but not suitable for cyanide or case hardening. An ideal steel for the experiental machinist. For simple heat treatment—Heat to 1525° F., quench in oil, and draw to the required hardness between 600° and 1200° F. (Drawing at 600° F. produces a Tensile Strength of 197,000 lbs/in^2, and a Brinnel hardness of 461).

—— S.A.E. 1020 ——

PHYSICAL PROPERTIES

As Cold Drawn:—Tensile Strength 77,000 lbs/in^2. Brinnel Hardness 163. Elongation in two inches 19%.
As Hot Rolled:—Tensile Strength 62,000 lbs/in^2. Brinnel Hardness 120. Elongation in two inches 35%.

Commonly referred to as plain carbon carburizing steel or case hardening steel. 1020 is usually supplied when simple "Cold Rolled" steel is ordered. It is not an easily machined stock as it tears badly when threaded and leaves a rough finish when turned. It is used when a ductile steel is necessary, and can be bent, punched, or deformed more than the high sulphur screw stocks. For general lathe work it is not recommended—1112, 1315 and 1335 are more suitable unless great ductility is required. Simple heat treatment is not recommended for 1020, a higher content carbon steel being more suitable. Case hardening of 1020 steel is quite common, giving a hard case and a ductile core. For case hardening, carburize at 1650° F., and quench in water or oil.

—— S.A.E. 3135 AND 3140 ——

PHYSICAL PROPERTIES OF 3140

As Cold Drawn:—Tensile Strength 105,000 lbs/in^2. Brinnel Hardness 202. Elongation in two inches 17%.
As Hot Rolled:—Tensile Strength 115,000 lbs/in^2. Brinnel Hardness 240. Elongation in two inches 22%.

Medium carbon types of the low chromium nickel steels used for parts requiring greater strength than obtainable with 3130. The ductility and toughness depend upon the heat treatment used but for the same conditions of treatment will be less than 3130. These steels, 3135 and 3140, are widely used and well known, and are used for shafting, forgings and machined parts of high strength. They are suitable only for simple heat treatment and should never be carburized. For machining purposes, 3135 when cold drawn should be specified as "Annealed" but when Hot Rolled should be used in its natural state; 3140 should be specified as "Annealed" when either the cold drawn or the hot rolled is used. For simple heat treatment—Heat to 1500° F. and quench in oil. Draw at the required hardness between 800° and 1300° F. (Drawn at 800° F. gives a Tensile Strength of 175,000 lbs/in^2 and a Brinnel Hardness of 341.)

—— 18-8 STAINLESS STEEL No. 303 ——

PHYSICAL PROPERTIES AS ANNEALED

Tensile Strength 94,000 lbs/in^2. Brinnel Hardness 165. Elongation in two inches 61%.

This steel is commonly spoken of as 18-8 Free Machining Stainless Steel, and contains 18% Chromium and 8% Nickel. This steel cannot be heat treated for hardening and is generally furnished in the annealed state. In general, the 18-8 group of Stainless Steels are the best for corrosion resistance and is used for hotel and clinical equipment, food and dairy equipment, fruit cannery, meat packing, and soda fountain equipment, etc. As produced by the Allegheny Steel Company this metal is called "Allegheny Metal." Beauty of surface, with a permanent finish resistant to many acids and alkalies, makes it a popular steel for decorative purposes. It can be used in non-corrosive atmosphere up to 1700° F. Machining is not difficult with proper tools and tool shapes, but the above grade number (No. 303) should be specified when this metal is to be used on the lathe.

TEMPERATURES OF STEEL JUDGED BY COLOR

The modern heat treatment of steel does not depend upon the color for an indication of temperature. Alloy steels are critical as to their hardening temperature, and gas heated or electrical ovens with accurate temperature indicators are used.

Judging temperature, especially high temperatures, by color depends entirely too much upon the lighting of the room and the eyes of the operator. For this reason, these listed colors should not be relied upon for accurate heat treatment work.

COLORS FOR TEMPERING

Degrees Centigrade	Degrees Fahrenheit	Color
221.1	430	Very Pale Yellow
226.7	440	Light Yellow
232.2	450	Pale Straw Yellow
237.8	460	Straw Yellow
243.3	470	Deep Straw Yellow
248.9	480	Dark Yellow
254.4	490	Yellow Brown
260.0	500	Brown Yellow
265.6	510	Spotted Red-Brown
271.1	520	Brown Purple
276.7	530	Light Purple
282.2	540	Full Purple
287.8	550	Dark Purple
293.3	560	Full Blue
298.9	570	Dark Blue

HIGH TEMPERATURES JUDGED BY COLOR

Degrees Centigrade	Degrees Fahrenheit	Color
400	752	Red heat—Visible in the dark
474	885	Red heat in twilight
525	975	Red heat in daylight
581	1077	Red heat in sunlight
700	1292	Dark Red
800	1472	Dull Cherry Red
900	1652	Cherry Red
1000	1832	Bright Cherry Red
1100	2012	Orange Red
1200	2192	Orange Yellow
1300	2372	Yellow White
1400	2552	White Welding Heat
1500	2732	Brilliant White
1600	2912	Dazzling Bluish White

Courtesy Machinery's Handbook

SPINDLE SPEEDS IN REVOLUTIONS PER MINUTE ATLAS 9-INCH AND UNIT PLAN LATHES

Refer to Figure 55, page 47.

918 UTILITY LATHES

Direct Cone Drive

Motor Belt Position	Spindle Belt Position 1	2	3
A	202	330	530
B	610	1015	1625

936 COMPOUND DRIVE LATHE

Direct Cone Drive

Motor Belt Position	Spindle Belt Position 1	2	3
A	220	370	600
Compound Drive			
A	47	80	130
With Pulley Set No. 426			
Direct Cone	1012	1702	2760

10B and 10C UNIT PLAN LATHES

Direct Cone Drive

Motor Belt Position	Spindle Belt Position 1	2	3	4
A	164	266	418	685
B	500	805	1270	2072

10A UNIT PLAN LATHE

With Jack Shaft (No. 10-675)

Motor Belt Position	Spindle Belt Position 1	2	3	4
A	272	437	680	1090
B	870	1400	2175	3500
Without Jack Shaft				
	575	1035	1725	2875

THE BACK-GEARED, SCREW-CUTTING LATHE

DEFINITION OF TERMS

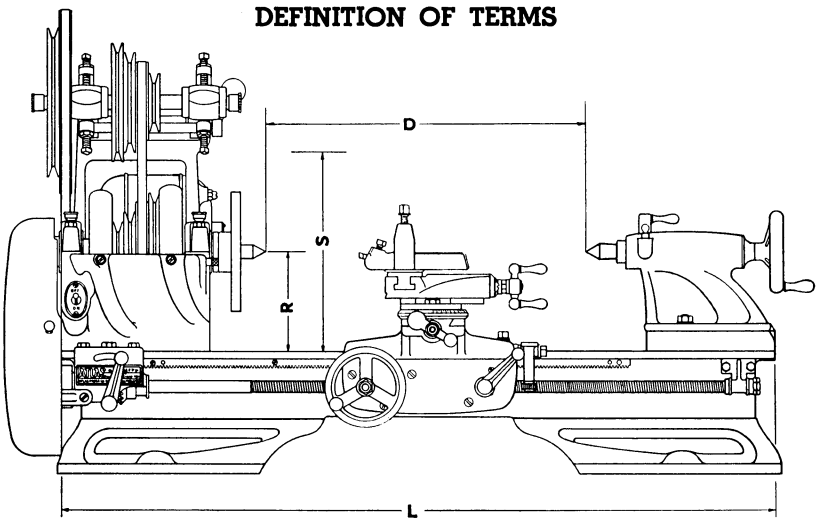

D.....**Distance between Centers**
S.....**Swing**
R.....**Radius (1/2 Swing)**
L.....**Length of Bed**

Part 11

INDEX

MANUAL OF LATHE OPERATION

INDEX

Page

—A—

Acme thread .....114-115, 143 table
Aligning tailstock 189
Allowances for machine fits....225 table
Allowances for reaming 88
Aluminum, machining 61-63
Aluminum, drilling 87
American National screw thread, see National Form thread
Ameroid, machining 64
Angle plate 80
Angular milling cutter 166
Arbor 81, 82
Arbor, grinding 172
Arbor press 82
Areas, calculations .....224 table
Armature work 180-183
A. S. M. E. tool bit designations..... 36
Attachments .....Part 8
Automatic power feed 22

—B—

Back gears 13-14
Bakelite, machining 64
"Bead" (woodturning) 208
Bearing, end thrust 10
Bearings, countershaft 15
Bearings, spindle 9
Bearings, spindle, adjustment 10
Bearings, spindle, running-in 4
Bearings, Timken 11
Bed construction and care 16-19
Bed, leveling 2
Beetle, machining 64
Belt adjustment 15
Belt positions 47
Bench top 1
Black walnut (woodturning) 218
Block plane (woodturning) 205
Boring bar 93
Boring operations 90-94
Boring tapers 190
Boring threads 112-113
Bracket adjustment slot 96
Brass, machining 59
Brass, drilling 87
Breaking in lathe 4
British Standard threads .....140 table
Bronze, machining 59-60
Brown & Sharpe tapers ....192-193 table
Bull gear 13-14
Bushing and sleeve assembly 96, 98

—C—

Caliper, hermaphrodite 69-70
Carriage adjustments 20-21
Carriage feeds 122-125, 128-131
Carriage, removing 21
Carriage stop 164-165
Cast iron, drilling 87
Cast iron, machining 54
Catalin, machining 64
Celluloid, machining 64
Center gauge 109
Center head attachment 70
Centers, lathe 25
Centers, lathe, alignment of 189
Centers, lathe, grinding 180
Center rest 157-159

Page

Center rest chuck 182
Center tester 75
Change gears .....26, Part 7
Chatter 31
Check bar 189
Checking trueness of work 70-71, 75
Chisel, gouge (woodturning) 203-204
Chisel, parting tool (woodturning) 205-207
Chisel, skew (woodturning) 204-205
Chisel, small gouge (woodturning)...209
Chisel, small skew (woodturning)....214
Chisels, scraping (woodturning) 214
Chisel set (woodturning) 200
Chuck, center rest 182
Chuck, drill 83
Chuck, headstock 77
Chuck, independent 74-75
Chuck, universal 76
Chucks, cleaning 79
Chucks, removing 77-78
Chucks, rules for use 78-79
Circles, calculations .....219, 224 tables
Clamping plate, boring 93
Clamping plate, milling 168
Clamp type dog 74
Clearance angles 35
Clearance angles, boring 91
Clearance angles, threading 105
Clutch, line-shaft 197-198
Coil winding .....125-126, 145-154 tables
Collet attachment 80-81
Collet, milling 167-168
Compound drive lathe, spindle speeds.230
Compound gear assembly 98
Compound rest 20
Compound rest handle adjustment... 22
Compound rest, taper work 184-185
Concave cuts (woodturning) 209-210
Connecting motor 3
Convex cut (woodturning) 208
Copper, machining 57-60
Coolants 33
Counterbalance, face plate 80
Countershaft 14
Countershaft bearings 15
Countersinking 71-72
"Cove" cut (woodturning) 209-210
Cross feed handle adjustment 22
Cross slide 20, 21
Cross slide stop 165-166
Crotch center 88-89
Cup center 200-201
Cut-off operations 160-162
Cut-off operations (woodturning) 211, 212
Cutting action 31
Cutting compounds 50
Cutting speeds .....49 table

—D—

Decimal equivalents .....220-221 table
Depth of cut 48
Depth of cut, boring 92
Depth of cut, threading 48, 110
Depth of thread .....104, 135 table
Dial gauge test 71
Diamond dresser, grinding 173
Die castings, drilling 87
Dividing operations 14
Dogs, lathe 73, 74

Page

Double depth of thread....104, 135 table
Double thread screws 104, 120-122
Dovetail slot, milling 167
Draw-in collet attachment 80-81
Drill chuck 83
Drill, countersink 71
Drill gauge attachment 85-86
Drill grinding 85
Drill grinding aattachment 86
Drill pad 88-89
Drill set 89-90
Drilling operations 83-90
Drills, lettered .....225 table
Drills, numbered .....225 table
Drills, twist .....83-85, 225 tables

—E—

Electrical coil winding
125-126, 145-154 tables
End mill 166
End mill, grinding 178
End thrust bearing 10
Extension bed for woodturning 200

—F—

Face plate 79-80
Face plate for woodturning..200, 213-215
Facing cuts 44-45
Facing cuts (woodturning) 213-215
Facing tool 44
False cutting edge 32
Feed per spindle revolution
48, 122-125, 128-131 tables
Feed screw handle adjustment 22
Fiber, machining 66
Filing 67
Fine feeds .....130-131 table
Finishing cuts 67
Finishing cuts (woodturning) ...215-216
Floor legs 2
Fluting 14
Follower rest 159-160
Forged steel parts, machining..... 54
Form cutting tools 41
Formica gear material, machining... 65
Fractional threads .....138 table
French polish (wood) 216
French Standard threads .....142 table

—G—

Gas engine drive 198
Gear box, reversing 23
Gear bracket positions 96
Gear chart 97
Gear, compound 98
Gear clearance 98
Gear-cutting 171
Gear, idler 98
Gear, spacer 98
Gear train formula 155-156
Gear trains 99-103
Gears, back 13-14
Gears, change .....26, Part 7
Gears, threading .....26, Part 7
Gibs, adjustment 20-21
Gouge chisel, large 203-204
Gouge chisel, small 209-210
Grinder, bench 37
Grinding lathe centers 180
Grinding operations 171-181
Gum (woodturning) 218

Page

—H—

Half nuts and closing mechanism.... 24
Handles, adjustment for play 22
Hand rest (woodturning) 200
Hand rest swivel (woodturning) 200
Hard rubber, machining 66
Headstock 5
Headstock chuck 77
Headstock spindle 8
Heat in cutting 33
Heavy cuts 50
Hermaphrodite caliper 69-70
Holding collet set (milling) 167-168
Holding the work .....Part 5
between centers 69-84
chucks 74-79
collet attachment 80-81
face plate 79
mandrel or arbor 81-82

—I—

Idler gear 98
Independent chuck 74-75
Indexing mechanism 14
Indexing table 14
Internal grinding 175-176
Internal threads 112-113
International Standard threads .141 table

—J—

Jackshaft 199
Jacobs center rest chuck 182
Jacobs drill chuck 83
Jacobs headstock chuck 77
Joanite, machining 64

—K—

Keys, A. S. A.....170 table
Keyways, standard .....170 table
Knurling operations 163-164

—L—

Laminated shims 10
Lathe attachments .....Part 8
Lathe care and construction .....Part 1
Lathe, size of 230
Lead, drilling of 87
Lead of thread 104
Lead screw 22
Lead screw bearing 23
Left hand threads 113-114
Lettered drills .....225 table
Leveling the lathe 2
Line-shaft clutch 197-198
Locating centers 69-70
Lubricants, cutting 50
Lubrication .....6-7 chart

—M—

Machine screw threads .....139 table
Machining of various materials...Part 4
Machinists tables .....Part 10
Mahogany (woodturning) 218
Major diameter 103

Page

Mandrel 81-82
Mandrel press 82
Maple (woodturning) 217
Marblette, machining 66
Maudslay's lathe .....IX Foreword
Metal cutting theory .....Part 2
Metric system .....223 tables
Metric threads
119, 134 table, 141-142 table
Mica undercutting with grinder..180-181
Mica undercutting with under-
cutting attachment 181-183
Micarta, machining 66
Milling attachment 166
Milling attachment (boring operation) 93
Milling cutters 166
Milling operations 166-171
Milling speeds 169
Minor diameter 103
Monel metal, machining 63
Morse tapers .....192, 194 table
Motor recommendations 3
Mounting motor 3
Mounting work between centers....73-74
Multiple threads 119-122

—N—

National Coarse thread .....136 table
National Fine thread .....137 table
National Form thread gauge 106
National Form threads 106, 137-137 tables
National Special threads ..138-139 tables
Nickel, machining 63
Nickel silvers, machining 60
Numbered drills .....225 table

—O—

Oak (woodturning) 217
Odd-pitch threads .....132-133 table
Odd-pitch threads, formula for
gear set-ups 155-156
Oiling lathe .....4, 6-7 chart
Overhang, avoiding 37

—P—

Pine (woodturning) 217
Pipe center 118
Pipe-type threads ....117-118, 144 tables
Pitch diameter 103-104
Pitch of thread 104
Plaskon, machining 64
Plastics, machining 64-66
Polishing 67
Poplar (woodturning) 217-218
Power feed mechanism 22
Press, arbor or mandrel 82
Pulley clutch 197-198
Pyralin, machining 64

—Q—

Quadruple threads 121-122

—R—

Rake angles 35, 42
Rake angles, boring 92
Rake angles, threading 105
Reamer grinding 178-180

Page

Reaming operations 88
Reeding 14
Reseating cutters, grinding of...177-178
Reverse gear box 23
Reversing switch 174-175
Roughing tool bit 41
Routing 167
Rubber, hard, machining 66
Running in bearings 4

—S—

S. A. E. steels .....52 table
S. A. E. steels, data and
descriptions 227-229
S. A. E. thread, see National Fine
Sanding (woodturning) 215-216
Screw center 200, 213
Screw cutting .....Part 7
Screw pitch gauge 107
Serrating 14
Setover, tailstock 185, 188-189
Setting tool to work 42, 45-46
Setting up lathe 1
Shims, laminated 10
Sizes of drills 225
Skew chisel, large 204, 205
Skew chisel, small 214, 215
Sleeve and bushing assembly.....96, 98
Slipping teeth on spindle gear....121-122
Spacer gear 98
Spark plug threads .....138, 141 tables
Special threads 125
Special tool shapes 41
Speeds, drilling 87
Speeds, milling 169
Speeds, spindle 47, 230
Speeds, surface 49
Speeds, threading 110
Speeds, woodturning 216
Spindle bearings 8, 11
Spindle end play adjustment 10
Spindle headstock 8
Spindle speeds (back-geared lathe) .. 47
Spindle speeds (9-inch lathe) 230
Spindle speeds (Unit-Plan lathe) 230
Spoke-spacing 14
Spring-making 126
Sprocket-spacing 14
Spur center 200, 201
Square threads .....115-116, 143 table
Squaring shaft end 167
Stainless steel, machining 56
Steady rest 157-159
Steady rest (woodturning) 261
Steel, machining 50-53
Steel, drilling 87
Steel, complete table 52
Steel, data and descriptions 227-229
Steel, forged, machining 54
Steel, tool, machining 53-54
Stove bolts .....144 table
Surface speeds .....49 table
Surface speeds, milling .....169 table
Swing, lathe 230

—T—

Table boards 2
Tables, machinists .....Part 10
Tailstock construction 24
Tailstock setover 185, 188-189
Tangents .....186-187 table
Tap drill sizes .....136-144 tables
Taper boring 190
Taper cutting 183-195

Page

Taper cutting attachment 190-192
Taper cutting tables 192-195
Tenite, machining 64
Textolite, machining 66
Theory of metal cutting .....Part 2
Thread cutting .....Part 7
  Acme .....114-115, 143 table
  British standard .....140 table
  fractional .....138 table
  French standard .....142 table
  internal 112-113
  International standard .....141 table
  left hand 113-114
  Metric .....119, 134 table, 141-142 table
  National Form .....106, 136-137 table
  National Special .....138-139 table
  odd pitch .....132-133 table
  pipe type .....117-118, 144 table
  precautions 111
  quadruple 121-122
  special 125
  square .....115-116, 143 table
  Whitworth .....117, 140 table
Threading chart 97
Threading dial 110-111
Threading tool, circular 107
Threading tools 104
Thrust bearing adjustment 10
Timken bearings 11
Timken bearings, adjustment of 12
Timken spindle, removing 16
Tools, cutting 35-46
  boring 91-92
  edge of 33
  for armatures 183
  form-cutting 41
  grinding .....37-40, Part 7
  roughing 41
  special 41
  threading .....Part 7
  turning 38, 39
  woodturning 199-200
Tool holders 37, 42-43
Tool post grinder 171
Tool rests for woodturning 200
Tool steel, machining 53-54
Trafford, machining 64
Trueing armatures 182
Trueing work in lathe 70, 75
T-slots, milling 167
Turret attachments 196-197
Twist drills .....83-85, 225 tables

Page

—U—

Undercutting mica 180-183
Unit Plan lathe, spindle speeds 230
Universal chuck 76
U. S. S. threads, see National Coarse
Utility lathe, spindle speeds 230

—V—

Valve grinding 176-177
Valve stem grinding 178
Vee belts 16
Vee cuts (woodturning) 207-208
Vee threads 105
Volumes, calculations .....224 table

—W—

Walnut (woodturning) 218
Weights and measures ....222-223 tables
White oak (woodturning) 217
White pine (woodturning) 217
Whitworth thread .....117, 140 table
Wire and sheet metal gauges...226 table
Wire wrapping 126
Wood and metal cutting, differences. 30
Woodruff key dimensions .....170 table
Woodruff keyway cutter 166
Woodruff keyway slots .....170 table
Woods, types of 201, 217-218
Woodturning operations .....Part 9
  attachments 200
  cutting off 211-212
  facing 213-215
  finishing 215-216
  mounting work 201-202
  sizing grooves 206
  spindle speeds 216
  taking cut 202-203
  types of cuts 207-212, 214-215

—Y—

Yellow poplar (woodturning) 217-218

—Z—

Zamak parts 26-28
Zamak parts, casting machine 28

Acknowledgment

The drawing of Maudslay's lathe, page IX, Foreword, has been reprinted through courtesy of Popular Mechanics Magazine.

Part 12

PAGES FOR YOUR SHOP NOTES

PAGES FOR YOUR SHOP NOTES

Your own shop notes, entered on the following pages, will make a valuable supplement to the facts presented in this Manual. Every experienced shop man keeps such a record. It should include miscellaneous "dos" and "don'ts," reading notes, formulas, page references and "pointers" from other lathe men.

The notes on these first two pages are reprinted through the courtesy of Popular Science Monthly. They will give you a good start toward a complete "glossary" of your own.

* * *

A 3/4" brass bar about 12" long makes the best "bumper" for ejecting headstock center or reducing sleeve -- a smaller bar may bruise tapers. Face the end of the bar occasionally.

* * *

A piece of paper pasted over the face of a dial indicator and exposing ten thousandths each side of zero will keep the eyes from wandering.

* * *

For precise measuring with a steel scale, become accustomed to make measurements from the one inch graduation. The ends of scales wear and cause inaccuracies when used as the initial gauging point.

* * *

Geared scroll chucks must operate freely and should be given a good cleaning every five or six weeks. They will give better results and last much longer when cleaned regularly.

* * *

Characters for identification purposes can be placed on steel and metal bars with rubber stamps and printer's ink, and protected with a thin coat of shellac or lacquer.

* * *

When using a tool post grinder to grind diameters to close tolerances, swivel the compound rest 80 degrees from center. Each movement of 0.001 inch on the micrometer dial will then move the grinding wheel forward 0.00017 inch. When taking minute cuts of known value, this method has many advantages.

Stand aside before setting any grinding wheel into motion. The centrifugal force of a wheel increases as the square of the velocity.

* * *

When you are through with a tool, return it immediately to its proper place in as good condition as when you took it.

* * *

Never withdraw a hand reamer from a hole by turning it counter-clockwise.

* * *

Never attempt to drive or press a bushing into a hole if it is possible to draw it into place by inserting a threaded bolt through the bushing and the part to be bushed and taking up on a nut at the opposite end.

* * *

When a milling cutter chatters, try slowing down the spindle speed. The teeth of the cutter may be synchronized with the lathe gear teeth at the speed the spindle is running.

* * *

The cutting edges of reamers may be protected by wrapping them in several places with gummed tape before storing.

* * *

If a correctly ground wire drill cuts large, the first thing to do is to check the concentricity of the chuck. If there is no trouble there, shorten the drill 1/4 to 1/2 inch and repoint it.

* * *

An occasional oilstoning of the cutting edges of a drill or reamer will extend the time between grinds. Stoned cutting edges also stand more feed and speed.

* * *

A milling cutter will last much longer between grinds if the sharpening is finished by taking a light cut with a freshly dressed wheel and oilstoning the cutting edges.

SUPPLEMENT

To Adapt the

"MANUAL OF LATHE OPERATION"

TO

Sears MASTER CRAFTSMAN LATHES

We are presenting the new "Manual of Lathe Operation" to Sears Lathe owners because we believe it is one of the most practical, complete and up-to-date books available. This supplement includes all information essential to adapt this Manual to the Sears Master Craftsman Lathe.

SEARS, ROEBUCK & COMPANY
CHICAGO ILLINOIS

THE FOLLOWING PAGES INCLUDE TABLES AND DRAWINGS WHICH MUST BE SUBSTITUTED FOR MATERIAL APPEARING IN THE "MANUAL OF LATHE OPERATION."

The following tables between pages 128 and 154 do not apply to Master Craftsman Lathes:

Table I, page 128

Table II, page 130

Table III, page 132

Table IV, page 134

Table XVIII, page 145

Table XIX, page 146

Table XX, page 147

Table XXI, page 148

Table XXII, page 149

Table XXIII, page 150

Table XXIV, page 151

Table XXV, page 152

Table XXVI, page 153

Table XXVII, page 154

All Lathe Attachments and Accessories shown in the "Manual of Lathe Operation," with the exception of the Turret Attachments (Pages 196-7) are available for Master Craftsman Lathes. Specify model and serial number of lathe when ordering attachments.

THE COUNTERSHAFT OF THE MASTER CRAFTSMAN LATHE

Substitute for Material on Pages 14, 15 and 16.

As shown at the right, the countershaft of the Master Craftsman Lathe is hinged to the bench leg. A handy tension lever provides means for quickly adjusting belt tension. By lifting the lever upward and forward, tension is released so that belt may be changed quickly for different speeds. Sixteen speeds are available between 28 and 2,072 R.P.M. Figures 55 and 56, pages 47 and 49 of the "Manual of Lathe Operation," apply to Master Craftsman lathes. The countershaft spindle rotates in bronze bushings which are lubricated from the oil cups at the top of the countershaft bracket.

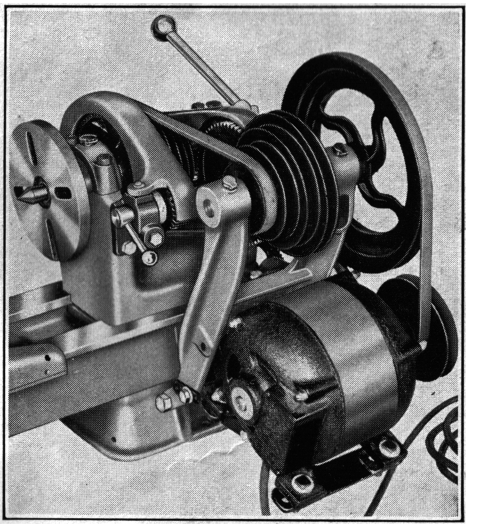

Master Craftsman Countershaft.

BELT ADJUSTMENT

The spindle drive belt is adjusted quickly by turning the countershaft tension knob—only a moderate amount of tension is necessary. The motor drive belt is adjusted by moving the motor bracket upward or downward.

MASTER CRAFTSMAN REVERSE FEED MECHANISM

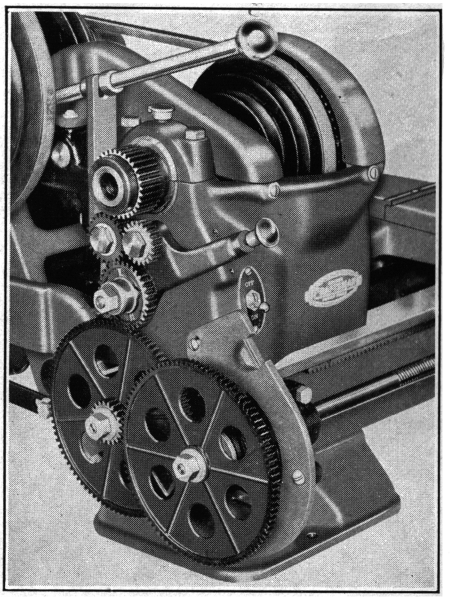

Substitute for Material on Pages 22-24.

The longitudinal power feed on the Master Craftsman Lathe consists of a tumbler gear arrangement, gear train and half-nut mechanism. The figure at the left shows how the spindle gear meshes with a 32-tooth gear on the tumbler bracket which drives the gear train through one or both of the tumbler gears. This construction provides means for running the feed screw either forward or reverse.

The tumbler bracket has a handy indexing knob which may be located in the forward, neutral or reverse position. With the spindle turning at the lower speeds, the tumbler may be shifted without injury to the gears. However, it is generally better practice to stop the lathe before shifting the tumbler lever.

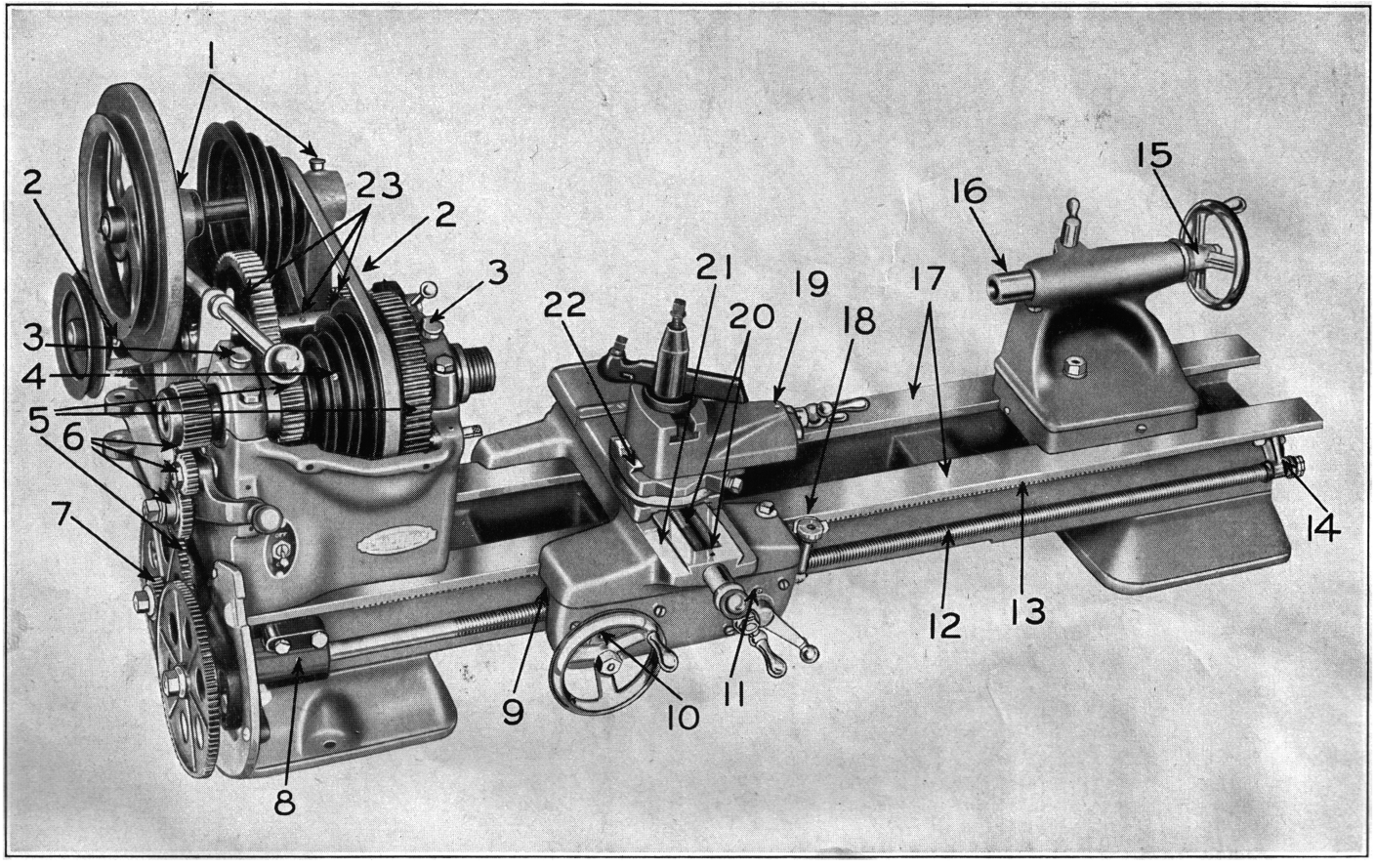
1
2
23
2
3
3
4
5
6
7
8
9
10
11
12
13
14
15
16
17
18
19
20
21
22

OILING CHART FOR 2028, 2030 AND 2032 LATHES

1 Countershaft Bearings—Oil with No. 10 motor oil or equivalent every time the lathe is used.

2 Motor Bearings—Sleeve type motors have two oil cups which should be filled once a week with S.A.E. No. 10 Motor Oil or equivalent. Ball bearing motors have a sealed-in type bearings—every six months the small headless screw in these bearings should be removed and moderate quantity of automotive cup grease forced around the bearing.

3 Left and Right Headstock Bearings—Oil with No. 10 oil or equivalent every time lathe is used.

4 Spindle Pulley—Every time the lathe is used in back gear, remove the small screw in the bottom of the second step of the idler pulley and oil freely with No. 10 motor oil or equivalent. Replace screw. (This does not apply to the 2028 model).

5 Back Gears and Change Gears—A small amount of grease, preferably graphite grease, applied to the gear teeth will aid in obtaining smoother, more quiet operation.

6 Tumbler Gear Bearings—Put a few drops of No. 10 motor oil or equivalent on the tumbler gear bearings each time the lathe is used.

7 Change Gear Bearings—Put a few drops of No. 10 motor oil or equivalent on the change gear bearings each time the lathe is used.

8 Lead Screw Stub Bearing—Put a few drops of No. 10 motor oil or equivalent in the hole on top of the bearing bracket every time the lathe is used.

9 Carriage Traverse Gear Case—Every time the lathe is in use, put a few drops of No. 10 motor oil in oil hole on top of gear case on back of carriage apron.

10 Carriage Hand Wheel Bearing—Put a few drops of No. 10 motor oil or equivalent in the ball spring oil hole every time the lathe is used.

11 Half-nut Lever Bearings—Put a few drops of No. 10 motor oil or equivalent in the ball spring oil hole every time the lathe is used.

12 Lead Screw—About once a month clean the lead screw threads with kerosene and a small stiff brush and apply a small amount of No. 10 motor oil or equivalent.

13 Rack (on bed, under front way)—About once a month apply a small amount of cup grease to the rack after cleaning with kerosene and a small stiff brush.

14 Lead Screw Bearing (Right End of Lathe)—Put a few drops of No. 10 motor oil or equivalent in the oil hole on top of the bearing every time the lathe is used.

15 Place a few drops of oil between the handwheel and screw bearing whenever using lathe.

16 Tailstock Ram—Keep the outside surface of the tailstock ram well oiled.

17 Lathe Bed Ways—Keep the bed ways oiled at all times with No. 10 motor oil or equivalent and free from chips. Wipe off the ways before using and cover with fresh oil. Always leave a generous film of oil on the ways when the lathe is not in use. The lathe should be completely covered when not in use. During grinding operations cover bed ways with canvas or cardboard.

18 Thread Dial—Once a week put a few drops of No. 10 motor oil or equivalent around the rim of the top of the thread dial.

19 Compound Slide Screw—Every time the lathe is used put a few drops of No. 10 motor oil or equivalent in the oil hole on top of the compound rest and above the compound screw bearing.

20 Cross Slide Screw—Put a few drops of No. 10 motor oil or equivalent in the oil hole above the front cross slide screw bearing after removing the small screw. Replace the screw. This should be done every time the lathe is used. Clean the cross slide screw regularly with a small stiff brush. Oil the screw threads by running compound rest back and forth.

21 Cross Slide Ways—Clean regularly and apply a liberal quantity of No. 10 motor oil or equivalent to the ways whenever the lathe is used.

22 Compound Slide Ways—Clean regularly and apply a liberal quantity of No. 10 motor oil or equivalent to the ways whenever the lathe is used.

23 Back Gear Spindle—Every time the back gears are used, remove the small screw in the center of the back gear spindle and oil freely with No. 10 motor oil or equivalent. Replace screw. (Does not apply to 2028 Lathe).

Keep all lathe bearing surfaces perfectly clean. Dirt is the natural enemy of accurate lathe work.

GEAR BRACKET POSITIONS

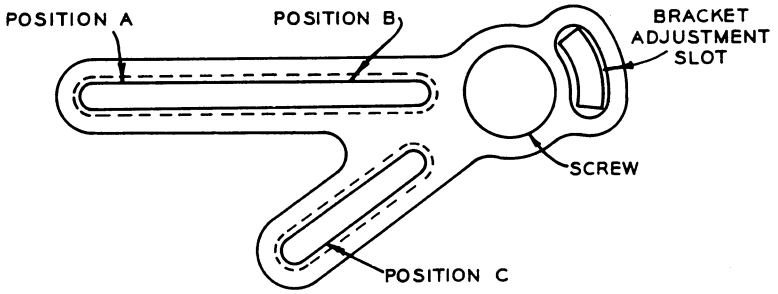

Substitute for Fig. 125, *page* 96.

SPECIAL GEAR BRACKET

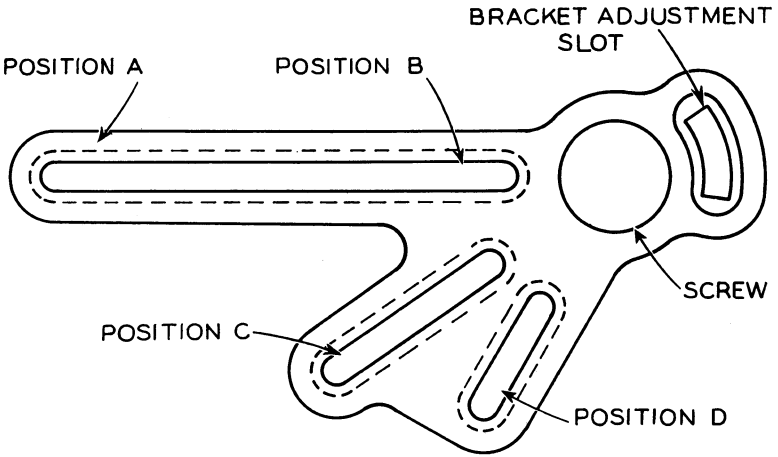

Special Gear Bracket for Metric and Special Threads, available at factory.

THREADING CHART FOR MASTER CRAFTSMAN LATHES

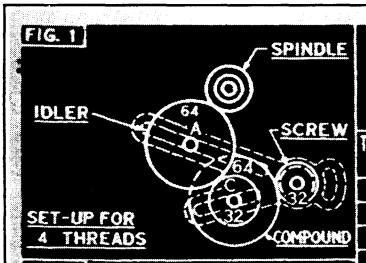

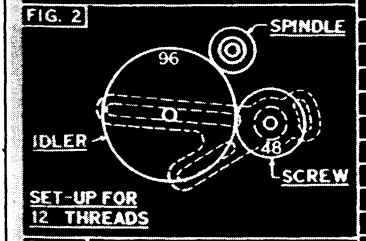

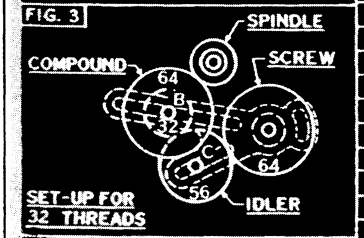

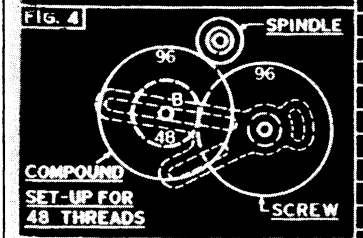

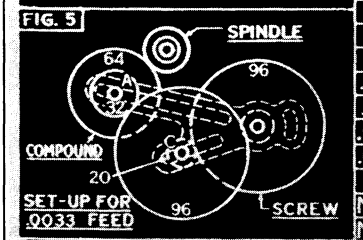

THREADING CHART

THREADS PER IN.	SCREW	IDLER STUD	POS.	COMPOUND	POS.	FIG.
4	32	64	A	64-32	C	1
4½	36	"	A	"	C	1
5	40	"	A	"	C	1
5½	44	"	A	"	C	1
6	48	"	A	"	C	1
6½	52	"	A	"	C	1
7	56	"	A	"	C	1
8	32	96	—	——	—	2
9	36	"	—	——	—	2
10	40	"	—	——	—	2
11	44	"	—	——	—	2
11½	46	"	—	——	—	2
12	48	"	—	——	—	2
13	52	"	—	——	—	2
14	56	"	—	——	—	2
16	64	"	—	——	—	2
18	36	64	C	32-64	B	3
20	40	"	C	"	B	3
22	44	"	C	"	B	3
23	46	"	C	"	B	3
24	48	"	C	"	B	3
26	52	"	C	"	B	3
27	54	"	C	"	B	3
28	56	"	C	"	B	3
32	64	56	C	"	B	3
36	96	—	—	64-96	B	4
40	"	—	—	24-40	B	4
44	"	—	—	24-44	B	4
48	"	—	—	48-96	B	4
56	"	—	—	24-56	B	4
64	"	—	—	36-96	B	4
72	"	—	—	32-96	B	4
80	"	24-40	A	32-64	C	5
96	"	——	—	24-96	B	4
○ FEED PER REV. OF SPINDLE						
.0033	96	20-96	C	24-64	A	5
.0043	"	20-96	C	32-64	A	5
.0060	"	20-96	C	36-52	A	5
.0087	"	——	—	20-96	B	4

SPINDLE SPEEDS	MIN. R.P.M.	MAX. R.P.M.
№2028 LATHES	170	2072
№2030-32 "	28	2072

Substitute for Figure **126,** *page* **97.**

GEAR TRAINS FOR STANDARD THREADS AND CARRIAGE FEEDS

The following pages give detailed instructions for mounting gears for the more common thread sizes and carriage feeds. Refer to these pages and the lathe threading chart when making these set-ups. "Back Position" of a sleeve or the screw stub means the position *toward* the headstock. "Front Position" is the position *away from* the headstock. The gear is tightened in position by locking the nut behind the large washer on the inside of the "Bracket Adjustment Slot" (page 6).

GEAR TRAIN FOR 4 THROUGH 7 THREADS PER INCH

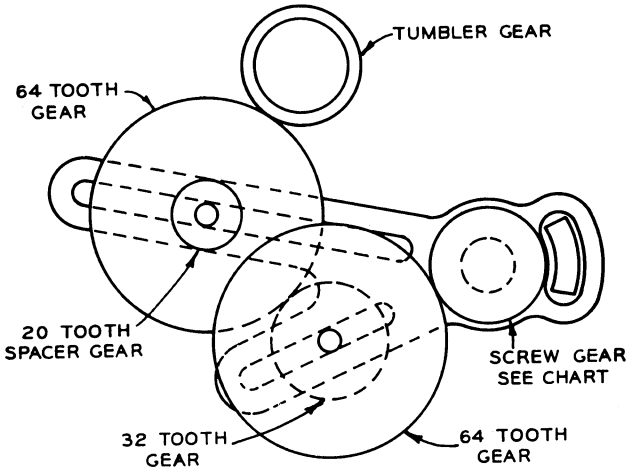

Substitute for Fig. 129, *page* 99.

1. Place on front position of screw stub the gear listed in "Screw" column of threading chart, page 7.

2. Place 64 tooth gear and 32 tooth gear on sleeve and mount in Position C on gear bracket with 32 tooth gear in back position. Tighten so that 64 tooth gear meshes with gear on screw position.

3. Place 64 tooth gear and 20 tooth gear on a sleeve and mount in Position A with 64 tooth gear in back position. Tighten so that 64 tooth gear meshes with 32 tooth gear in Position C. The 64 tooth gear is an idler; the 20 tooth gear is a spacer.

4. Swing entire gear bracket upward and tighten so that 64 tooth gear in Position A meshes with tumbler gear.

GEAR TRAIN FOR 8 THROUGH 16 THREADS PER INCH

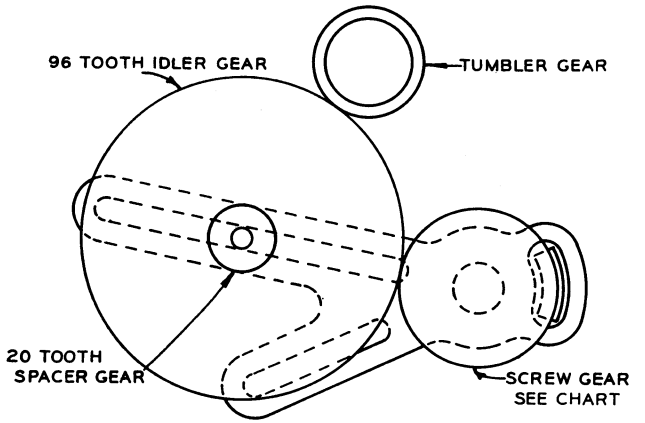

Substitute for Fig. **130,** *page* **100.**

1. Place on back position of screw stub the gear listed in "Screw" column of threading chart, page 7.
2. Place 96 tooth gear and 20 tooth gear on sleeve in Position A with 96 tooth gear in back position. Tighten so that 96 tooth gear meshes with gear in screw position. The 96 tooth gear is an idler; the 20 tooth gear is a spacer.
3. Swing entire gear bracket upward and tighten so that 96 tooth gear meshes with tumbler gear.

GEAR TRAIN FOR 18 THROUGH 32 THREADS PER INCH

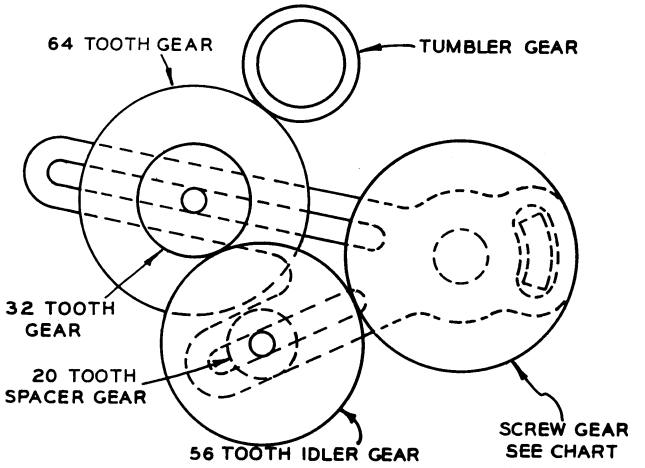

Substitute for Fig. **131,** *page* **101.**

1. Place on front position of screw stub the gear listed in "Screw" column of threading chart, page 7.
2. Place 56 tooth gear (or 64 tooth gear for 32 threads) and 20 tooth gear on sleeve and mount in Position C on gear bracket with 20 tooth gear in back position. Tighten so that 56 (or 64) tooth gear meshes with gear in screw position. The 56 (or 64) tooth gear is an idler; the 20 tooth gear is a spacer.
3. Place 64 tooth gear and 32 tooth compound gear on sleeve and in Position A with 64 tooth gear in back position. Tighten so that 32 tooth gear meshes with 56 tooth gear in Position C.
4. Swing entire bracket up and tighten so that 64 tooth gear in Position A meshes with tumbler gear.

GEAR TRAIN FOR 36, 40, 44, 48, 56, 64, 72 AND 96 THREADS PER INCH

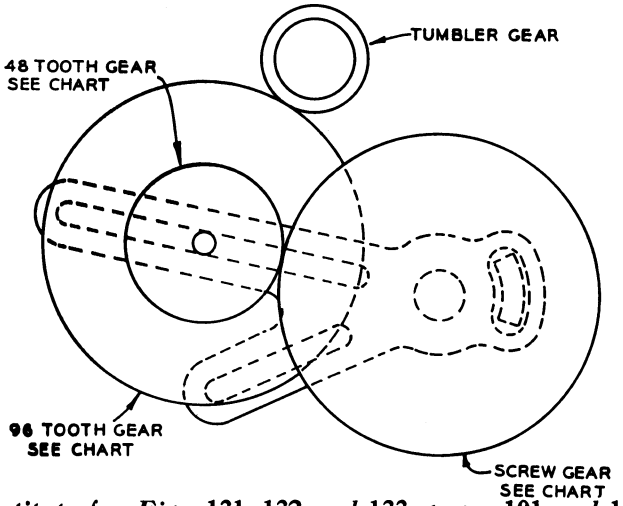

Substitute for Figs. 131, 132 *and* 133, *pages* 101 *and* 102.

1. Place 96 tooth gear on front position of screw stub.
2. Place on sleeve in Position A the compound gears listed in threading chart, page 7. The larger gear is in back position. Tighten so that smaller gear meshes with gear on screw stub.
3. Swing entire gear bracket upward and tighten so that larger compound gear in Position A meshes with tumbler gear.

GEAR TRAIN FOR 80 THREADS PER INCH

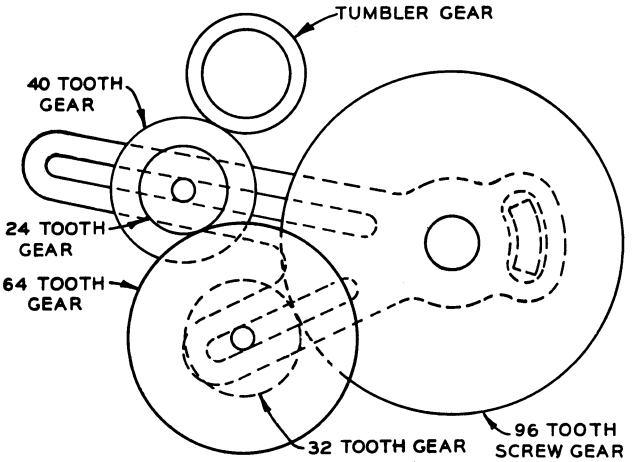

Substitute for Fig. 134, *page* 103.

1. Place 96 tooth gear in back position of screw stub.
2. Place 64 tooth gear and 32 tooth gear on sleeve in Position C with 32 tooth gear in back position. Tighten so that 32 tooth gear meshes with 96 tooth gear on screw stub. The 64 tooth and 32 tooth gears are compound gears.
3. Place 40 tooth gear and 24 tooth gear on sleeve in Position A with 40 tooth gear in back position. Tighten so that 24 tooth gear meshes with 64 tooth gear in Position C. The 40 tooth gear and 24 tooth gears are compound gears.
4. Swing entire bracket upward and tighten so that 40 tooth gear meshes with tumbler gear.

GEAR TRAIN FOR .0033 INCH CARRIAGE FEED

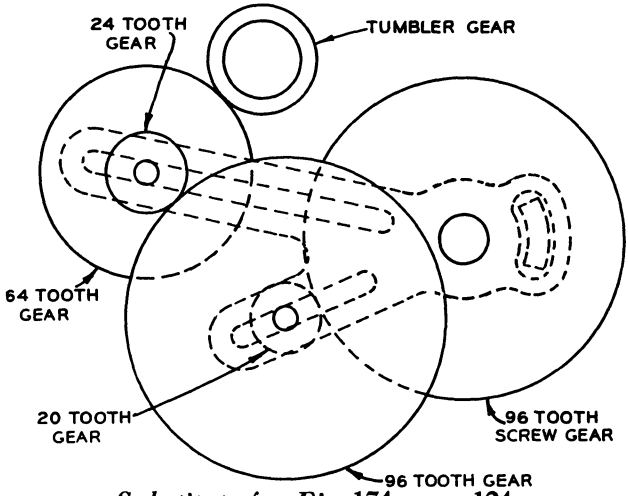

Substitute for Fig. 174, *page* 124.

1. Place 96 tooth gear in back position on screw stub.
2. Place 96 tooth gear and 20 tooth compound gear on sleeve in Position C with 20 tooth gear in back position and tighten so that 20 tooth gear meshes with 96 tooth gear on screw stub.
3. Place 64 tooth gear and 24 tooth compound gear on sleeve in Position A with 64 tooth gear in back position, and tighten so that 24 tooth gear meshes with 96 tooth gear in Position C.
4. Swing entire bracket upward and tighten so that 64 tooth gear in Position A meshes with tumbler gear.

GEAR TRAIN FOR .0043 INCH CARRIAGE FEED

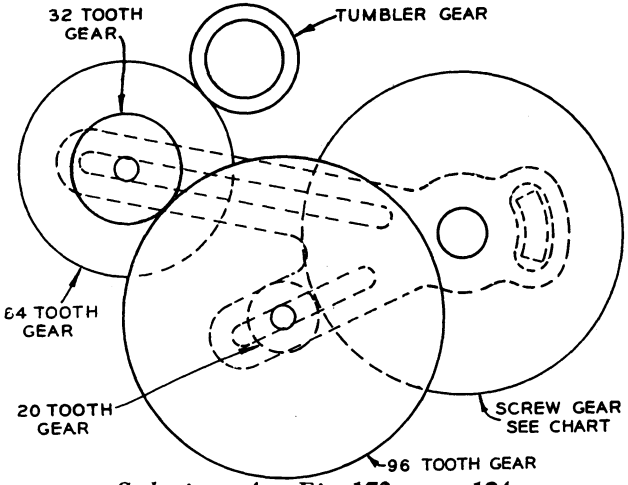

Substitute for Fig. 173, *page* 124.

1. Place 96 tooth gear in back position on screw stub.
2. Place 96 tooth gear and 20 tooth compound gear on sleeve in Position C with 20 tooth gear in back position and tighten so that 20 tooth gear meshes with 96 tooth gear on screw stub.
3. Place 64 tooth gear and 32 tooth compound gear on sleeve in Position A with 64 tooth gear in back position and tighten so that 32 tooth gear meshes with 96 tooth in Position C.
4. Swing entire gear bracket upward and tighten so that 64 tooth gear meshes with tumbler gear.

GEAR TRAIN FOR .0060 INCH CARRIAGE FEED

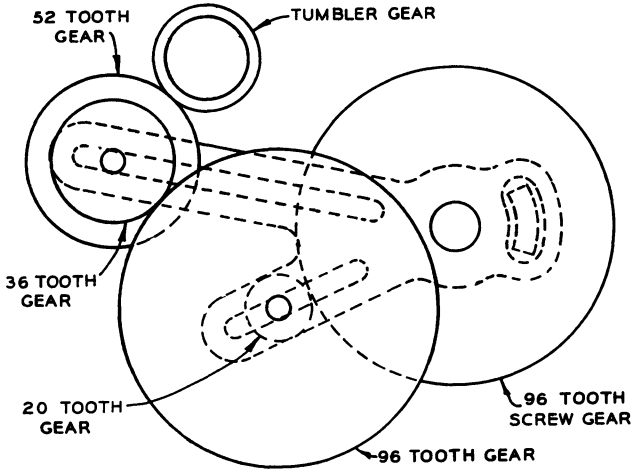

Substitute for Fig. 172, *page* 123.

1. Place 96 tooth gear in back position on screw stub.
2. Place 96 tooth gear and 20 tooth compound gear on sleeve in Position C with 20 tooth gear in back position and tighten so that 20 tooth gear meshes with 96 tooth gear on screw stub.
3. Place 52 tooth gear and 36 tooth compound gear on sleeve in Position A with 52 tooth gear in back position and tighten so that 36 tooth gear meshes with 96 tooth gear in Position C.
4. Swing entire gear bracket upward and tighten so that 52 tooth gear in Position A meshes with tumbler gear.

GEAR TRAIN FOR .0087 INCH CARRIAGE FEED

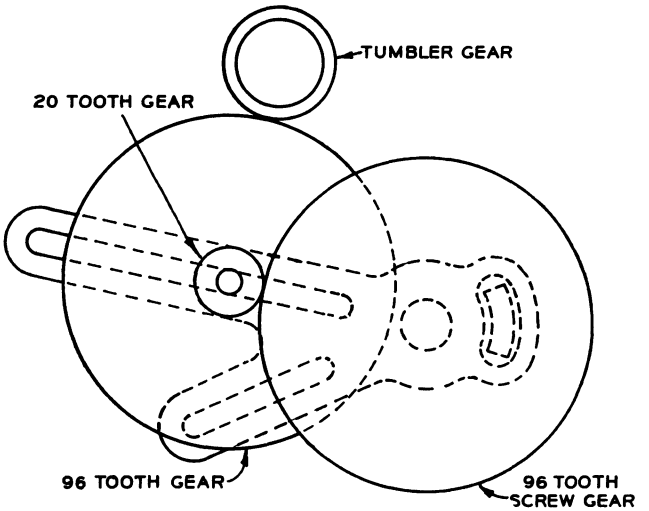

Substitute for Fig. 171, *page* 122.

1. Place 96 tooth gear in front position on screw stub.
2. Place 96 tooth gear and 20 tooth compound gear on sleeve in Position B with 96 tooth gear in back position and tighten so that 20 tooth gear meshes with 96 tooth gear on screw stub.
3. Swing entire gear bracket upward and tighten so that 96 tooth gear in Position B meshes with tumbler gear.

STANDARD METRIC THREADING CHART
FOR 2028, 2030 AND 2032 LATHES

Substitute for Table IV, page **134.**

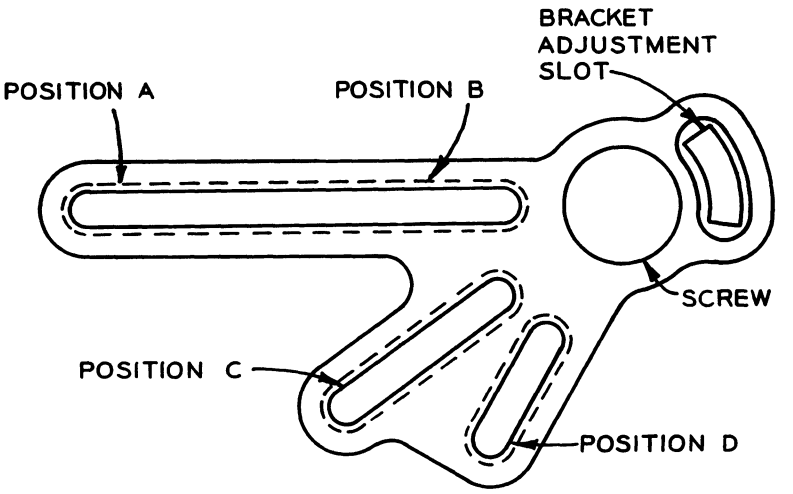

Special gear bracket available at factory—required for all set-ups below using "Position D."

Pitch in Millimeters	Screw	Position D B	Position D F	Position C B	Position C F	Position B B	Position B F	Position A B	Position A F	Note
.5	96B	—	—	24	56	40	44	—	—	
.75	44B	24	40	—	—	xxS	64	96	52	*
1.0	44B	32	40	—	—	xxS	64	96	52	*
1.25	44F	—	—	—	—	xxS	64	96	52	
1.5	44B	—	—	24	48	40	52	—	—	
1.75	44B	56	40	—	—	xxS	64	96	52	*
2.0	40B	24	44	—	—	36	52	64	20S	**
2.5	44F	—	—	48	52	—	—	96	20S	*
3.0	44F	—	—	40	52	—	—	96	20S	*
3.5	44B	—	—	56	48	40	52	—	—	**
4.0	40B	48	44	—	—	36	52	64	20S	*
4.5	40B	54	44	—	—	36	52	64	20S	*
5.0	24F	44	52	—	—	—	—	96	20S	*
5.5	20F	—	—	48	52	—	—	96	24S	*
6.0	20F	—	—	44	52	—	—	96	24S	
7.0	24B	52	44	—	—	40	56	64	20S	

SYMBOLS:

**—gear guard must be left open.
*—gear guard and bracket must be removed.
xx—special spacer available at factory.
F—position away from headstock.
B—position toward headstock.
I—idler gear (page 98)
S—spacer gear (page 98)

GEAR SET-UPS FOR THREADS PER INCH FROM 1¼ TO 80

Substitute for Table III, pages 132-133.

Many threads other than those given in the threading chart on the lathe, are easily set up on the Craftsman Lathe. The following chart gives all numbered threads from 2 to 80, as well as quarter and half numbered threads from 1¼ to 4, and half numbered threads to 12.5.
All but 29 of the threads listed are exact set-ups as marked. Of these, 22 are accurate to 1 part in 1,000 or better, and the remaining 7 are accurate to 1 part in 300 or better.

Threads per Inch	Accuracy per Inch	Screw	Position D		Position C		Position B		Position A		Note
			B	F	B	F	B	F	B	F	
1.25	Exact	20F	—	—	24	96	—	—	96I	xxS	
1.5	Exact	24	—	—	24	96	—	—	96I	20S	f
2.	Exact	24	—	—	32	96	—	—	96I	20S	
2.25	Exact	24	—	—	36	96	—	—	96I	20S	
2.5	Exact	20	—	—	48	96	—	—	96I	24S	
2.75	Exact	24	—	—	44	96	—	—	96I	20S	
3.	Exact	24	—	—	32	64	—	—	96I	20S	
3.25	Exact	24	—	—	52	96	—	—	96I	20S	x
3.5	Exact	24	—	—	56	96	—	—	96I	20S	x
3.75	Exact	20	—	—	48	64	—	—	96I	24S	
4.	Exact	32	—	—	—	—	32	64	96I	20S	
4.5	Exact	36	—	—	—	—	32	64	96I	20S	
5.	Exact	40	—	—	32	64	—	—	96I	20S	
5.5	Exact	44	—	—	32	64	—	—	96I	20S	
6.	Exact	48	—	—	32	64	—	—	96I	20S	
6.5	Exact	52	—	—	32	64	—	—	96I	20S	
7.	Exact	56	—	—	32	64	—	—	96I	20S	
7.5	Exact	40	—	—	—	—	36	48	64I	20S	
8.	Exact	32	—	—	—	—	96I	20S	—	—	
8.5	1/3500	44B	—	—	36	20	20S	48I	64	46	*
9.	Exact	36B	—	—	—	—	—	—	96I	20S	
9.5	1/2000	52B	—	—	40	24	20S	44I	56	46	*
10.	Exact	40B	—	—	—	—	—	—	96I	20S	
10.5	Exact	56F	—	—	—	—	48	64	—	—	
11.	Exact	44B	—	—	—	—	—	—	96I	20S	
11.5	Exact	46B	—	—	—	—	—	—	96I	20S	
12.	Exact	48B	—	—	—	—	—	—	96I	20S	
12.5	Exact	64B	—	—	—	—	32	40	32	20	
13	Exact	52B	—	—	—	—	—	—	96I	20S	
14	Exact	56B	—	—	—	—	—	—	96I	20S	
15	Exact	54F	—	—	40	36	—	—	64I	20S	
16	Exact	64B	—	—	—	—	—	—	96I	20S	
17	1/3000	40B	—	—	46	64	—	—	44	36	
18	Exact	36F	—	—	20S	64I	—	—	64	32	
19	1/1500	40B	44	54	—	—	xxS	56I	56	24	h*
20	Exact	40F	—	—	20S	64I	—	—	64	32	
21	Exact	56F	—	—	54	36	—	—	64I	20S	
22	Exact	44F	—	—	20S	64I	—	—	64	32	
23	Exact	46F	—	—	20S	64I	—	—	64	32	
24	Exact	48F	—	—	20S	64I	—	—	64	32	
25	Exact	40B	32	40	—	—	xxS	56I	64	32	d*
26	Exact	52F	—	—	20S	64I	—	—	64	32	
27	Exact	54F	—	—	20S	64I	—	—	64	32	
28	Exact	56F	—	—	20S	64I	—	—	64	32	
29	1/1500	46B	36	40	—	—	xxS	64I	56	20	*
30	Exact	96F	—	—	40	32	—	—	64I	20S	
31	1/1200	56B	20	36	—	—	24S	54I	64	52	*

Continued on page 15

Continued from page 14

Threads per Inch	Accuracy per Inch	Screw	Position D B	Position D F	Position C B	Position C F	Position B B	Position B F	Position A B	Position A F	Note
32	Exact	64F	—	—	20S	56I	—	—	64	32	
33	Exact	96F	—	—	—	—	44	32	—	—	
34	1/1100	48B	20	46	—	—	20S	40I	64	52	*
35	Exact	56B	—	—	32	64	—	—	40	32	
36	Exact	96F	—	—	—	—	—	—	96	64	
37	1/1300	54B	—	—	20	48	—	—	64	56	
38	1/1200	52B	—	—	20	48	—	—	56	46	
39	Exact	96F	—	—	—	—	52	32	—	—	
40	Exact	96F	—	—	—	—	40	24	64I	20S	
41	1/1000	64B	—	—	40	64	—	—	32	20	
42	Exact	56B	—	—	32	64	—	—	54	36	
43	1/2000	46B	32	46	—	—	xxS	56I	20	32	g*
44	Exact	96F	—	—	—	—	44	24	—	—	
45	Exact	54B	—	—	32	64	—	—	40	24	
46	Exact	96F	—	—	—	—	46	24	—	—	
47	1/1000	96B	—	—	—	—	24	40	54	46	
48	Exact	96F	—	—	—	—	96	48	—	—	
49	Exact	56B	—	—	32	64	—	—	56	32	h
50	1/500	64F	—	—	—	—	—	—	96	46	
51	1/950	96B	—	—	—	—	20	36	52	44	
52	Exact	96F	—	—	—	—	52	24	—	—	
53	1/1300	96B	—	—	—	—	20	36	54	44	
54	Exact	96F	—	—	—	—	54	24	—	—	
55	1/300	96F	—	—	46	20	—	—	—	—	
56	Exact	96F	—	—	—	—	56	24	—	—	
57	1/1300	56B	—	—	20	56	—	—	64	44	h
58	1/1400	46B	36	20	—	—	xxS	64I	56	20	c*
59	1/1800	46B	44	24	—	—	xxS	54I	56	20	*
60	Exact	96B	—	—	24	40	xxS	40I	54	36	*
61	1/1500	96B	—	—	24	52	—	—	46	54	
62	1/1300	96B	—	—	20	44	—	—	54	46	
63	Exact	64B	—	—	—	—	24	54	56	32	
64	Exact	96F	—	—	—	—	96	36	—	—	
65	Exact	96B	—	—	24	40	xxS	40I	52	32	*
66	Exact	64B	—	—	54	24	—	—	44	24	f
67	1/375	96F	—	—	—	—	56I	20S	—	—	
68	1/1100	96B	—	—	20	46	—	—	64	52	
69	Exact	64B	—	—	24	54	—	—	46	24	f
70	Exact	96B	—	—	32	56	—	—	40	24	
71	1/630	96B	—	—	20	48	—	—	64	52	
72	Exact	96F	—	—	—	—	96	32	—	—	
73	1/730	96B	—	—	20	36	xxS	44I	54	32	*
74	1/1300	96B	—	—	20	54	—	—	64	56	
75	1/625	52B	20	36	—	—	xxS	64I	64	20	c*
76	1/2200	96B	—	—	20	52	—	—	56	46	
77	1/325	96F	—	—	—	—	64I	20S	—	—	
78	Exact	96B	—	—	—	—	24	48	52	32	
79	1/3100	54B	—	—	20	54	—	—	52	24	j
80	Exact	96B	—	—	32	64	—	—	40	24	

SYMBOLS:

c—extra 20 tooth gear
d—extra 40 tooth gear
f—extra 24 tooth gear
g—extra 46 tooth gear
h—extra 56 tooth gear
j—extra 54 tooth gear

F—position away from headstock
B—position toward headstock
I—idler gear (page 98)
S—spacer gear (page 98)
xx—spacer made by turning down a 20 tooth gear to an outside diameter of 1-1/16 inch.

*—extra sleeve, bushing and bolt assembly
x—gear guard and bracket must be removed.

NOTE: Set-ups using "Position D" require special gear bracket available at factory (see page 6).